Marine XT Vibration Isolators

Marine vibration isolators with different stiffness characteristics in each axis, designed for engines generating high propeller thrust loads.



The **AMC-MECANOCAUCHO® Marine XT vibration isolators** are specifically designed for the elastic mounting of **marine engines generating high thrust loads**, while providing a high level of vibration isolation.

Their design allows the elastomer to work in **compression and shear**, providing **different stiffness characteristics in all three axes**. A **high longitudinal stiffness** helps control engine motion caused by propeller thrust, while lower stiffness in the other directions provides effective isolation of engine-generated vibrations.

This combination provides an excellent balance of **vibration isolation, engine stability and motion control**, particularly in installations where significant thrust loads are transmitted through the propulsion system.

Their rugged construction and resistance to **oil, diesel fuel and harsh marine environments** make Marine XT vibration isolators particularly suitable for **propulsion engines and other onboard equipment subjected to high dynamic loads**.

AMC MECANOCAUCHO
Industrialdea Zona A - Pab. 35.
Asteasu E-20159, Gipuzkoa
Spain

Tel.: +34 843 74 00 13

sales@amcsa.es

www.mecanocaucho.com

In order to adapt its products to the state of the art, Aplicaciones Mecánicas del Caucho, S.A. reserves the right to modify the conception and manufacture of the materials presented in this catalog without prior notice.
Document generated on 24/11/2026.

Drawings

MARINE MOUNT Type XT

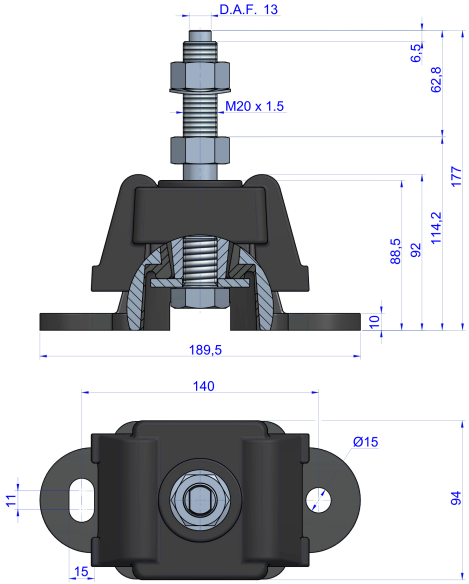

Type	Weight(lbs)	Code	Max. Load (lbs)	Shore
MARINE MOUNT Type XT	10	136330	331	35 Sh
		136331	496	45 Sh
		136332	771	55 Sh
		136333	1102	65 Sh

AMC MECANOCAUCHO
Industrialdea Zona A - Pab. 35.
Asteasu E-20159, Gipuzkoa
Spain
Tel.: +34 843 74 00 13
sales@amcsa.es
www.mecanocaucho.com

In order to adapt its products to the state of the art, Aplicaciones Mecánicas del Caucho, S.A. reserves the right to modify the conception and manufacture of the materials presented in this catalog without prior notice.
Document generated on 24/11/2026.

Elastic properties

NATURAL FREQUENCY
AMC MECANOCAUCHO® MARIN MOUNT XT

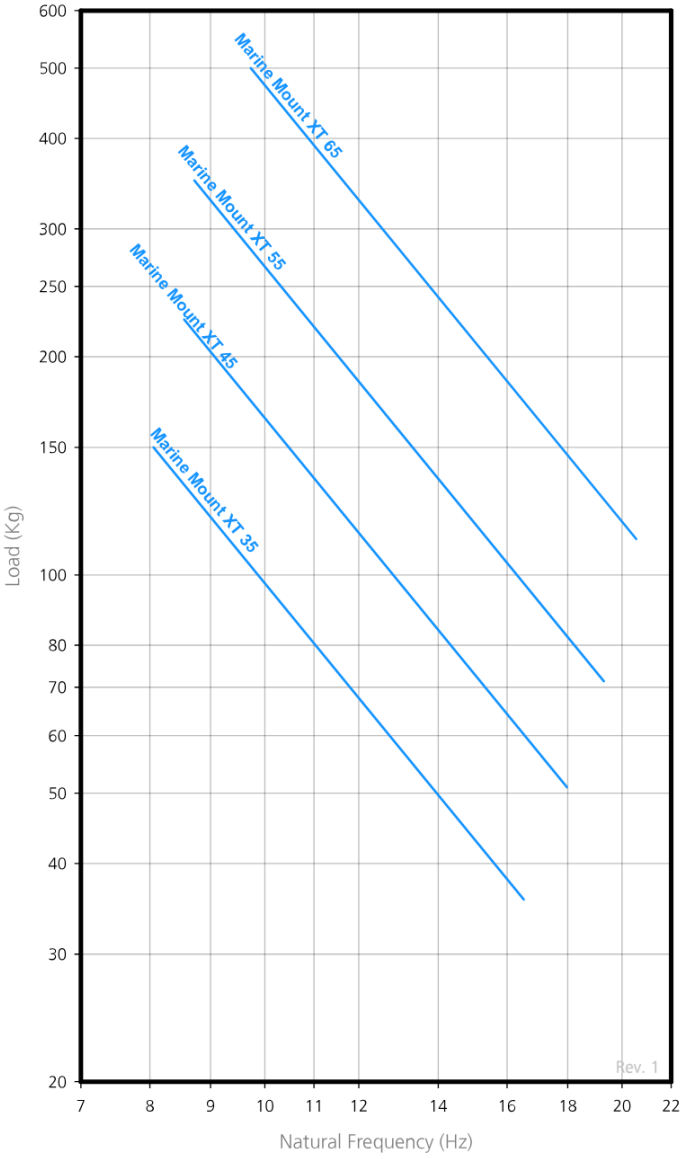

LOAD DEFLECTION GRAPH
AMC MECANOCAUCHO® MARIN MOUNT XT

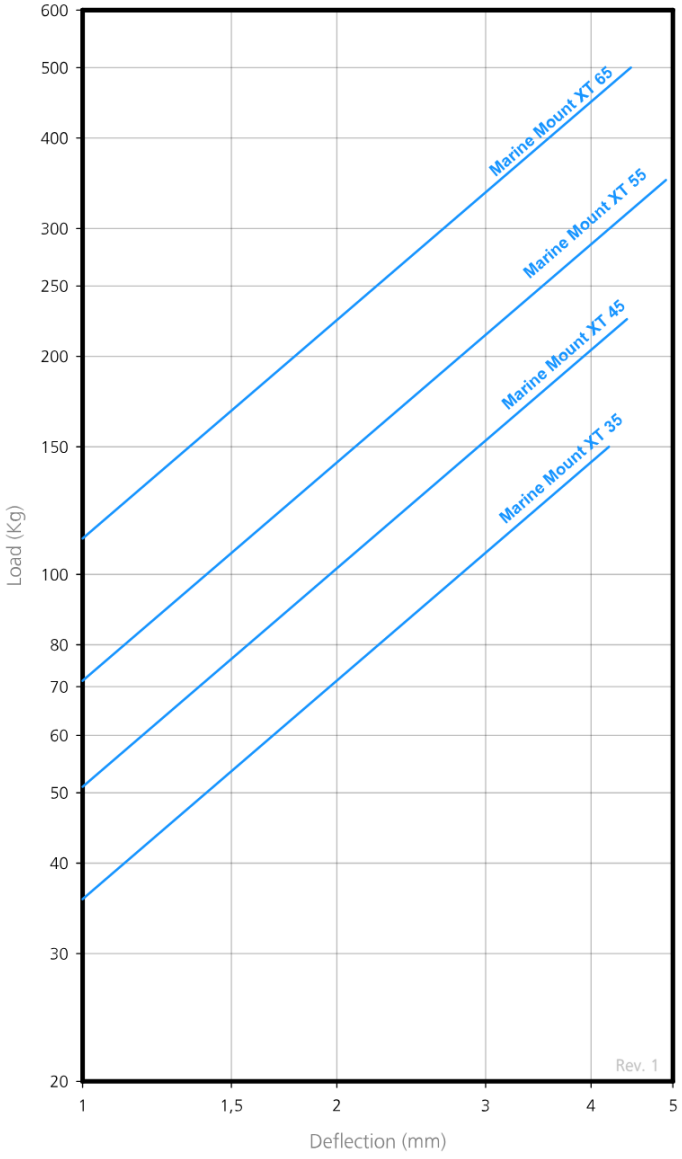

AMC MECANOCAUCHO
Industrialdea Zona A - Pab. 35.
Asteasu E-20159, Gipuzkoa
Spain
Tel.: +34 843 74 00 13
sales@amcsa.es
www.mecanocaucho.com

In order to adapt its products to the state of the art, Aplicaciones Mecánicas del Caucho, S.A. reserves the right to modify the conception and manufacture of the materials presented in this catalog without prior notice.
Document generated on 24/11/2026.

Technical characteristics

AMC-MECANOCAUCHO® Marine XT anti vibration mounts have a special design that provides 3 different stiffness values in the 3 different directions, the highest being the one in the longitudinal direction. This design allows the mounts to face high longitudinal loads (thrust loads produced by marine engines) while their low lateral and vertical stiffness values allow them to keep a high isolation level against the main excitations from the crankshaft of the engine (which occurs at the plane with the lowest stiffness values of the mount).

- The top metal hood protects the rubber from the Ozone, UV rays, diesel or oils which could damage the rubber.
- The metal parts have a suitable anticorrosive treatment for outdoor applications. RoHs compliant.
- They have an interlocking metal component that provides a fail-safe protection for mobile applications. This device limits vertical movement when the mounting is submitted to shock inputs.
- The mounts are clearly identified, the baseplates are engraved with the type and hardness making it possible to easily recognize the part even after several years of use.
- Maximum leveling: 3 mm. For further leveling, we recommend to use **shims**.

Advantages

High protection against weathering and chemical contamination

The bell housing protects the rubber from ozone and UV radiation, while also preventing contact with diesel, oils, or other chemicals that could damage it.

Easy installation

This mount requires no major modifications to the structure for installation.

High robustness in dynamic applications for improved durability

These mounts offer enhanced robustness and are designed to withstand extreme load peaks. They are especially recommended when good durability is required in demanding applications.

AMC MECANOCAUCHO
Industrialdea Zona A - Pab. 35.
Asteasu E-20159, Gipuzkoa
Spain
Tel.: +34 843 74 00 13
sales@amcsa.es
www.mecanocaucho.com

In order to adapt its products to the state of the art, Aplicaciones Mecánicas del Caucho, S.A. reserves the right to modify the conception and manufacture of the materials presented in this catalog without prior notice.
Document generated on 24/11/2026.