1V-SR Spring Isolator

High-capacity spring isolator with Sylomer® base, offering up to 1.2 in (30 mm) static deflection and a natural frequency as low as 4 Hz.



The **AMC-MECANOCAUCHO® 1V-SR Spring Isolator** is designed for the **vibration isolation of machinery and equipment with high loads**, requiring a low natural frequency and effective low-frequency vibration isolation.

With a **static deflection of up to 1.2 in (30 mm)**, the springs provide **natural frequencies as low as 4 Hz**, ensuring effective low-frequency vibration isolation.

An **integrated leveling system** facilitates height adjustment and accurate leveling of the equipment during installation.

The 1V-SR Spring Isolator is supplied as standard with a **Sylomer® base**, which complements the action of the spring by reducing the transmission of **mid and high frequencies that may propagate through the steel springs**. The **spring + Sylomer® combination** therefore provides effective vibration isolation over a broader frequency range.

AMC MECANOCAUCHO
Industrialdea Zona A - Pab. 35.
Asteasu E-20159, Gipuzkoa
Spain
Tel.: +34 843 74 00 13
sales@amcsa.es
www.mecanocaucho.com

In order to adapt its products to the state of the art, Aplicaciones Mecánicas del Caucho, S.A. reserves the right to modify the conception and manufacture of the materials presented in this catalog without prior notice.
Document generated on 23/11/2026.

Drawings

1V-SR

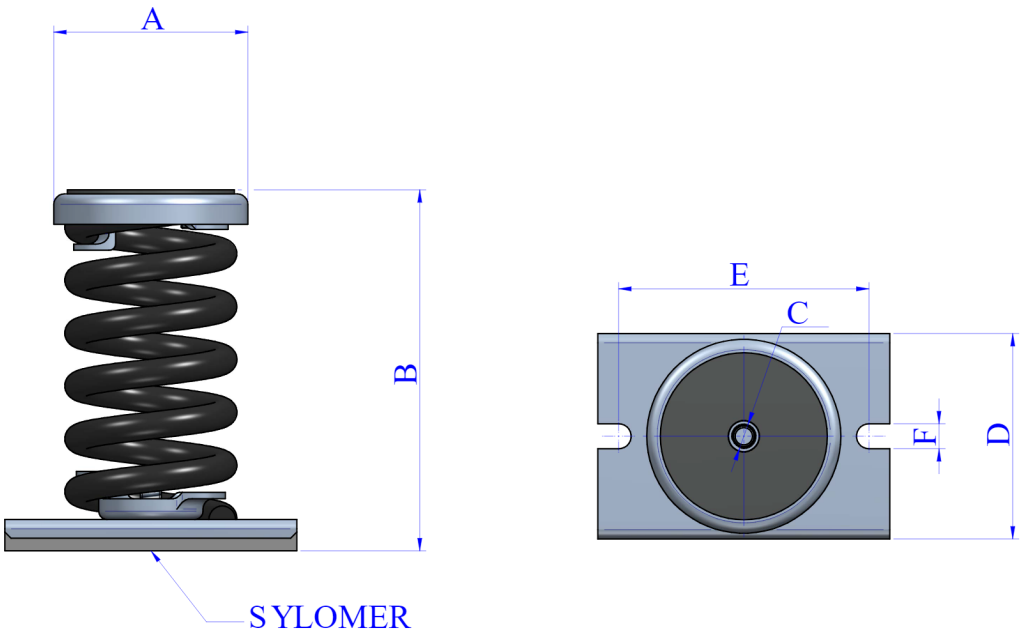

Type	Code	Max. Load(lbs)	Spring color	K(N/mm)	A(in)	B(in)	C(in)	D(in)	E(in)	F(in)	Weight(lbs)
1V-SR	21211	441	BLACK	64	3.66	6.81	M12	3.88	4.72	0.47	3
	21212	882	BLACK	134	3.66	6.81	M12	3.88	4.72	0.47	3
	21213	1433	BLACK	181	3.66	6.81	M12	3.88	4.72	0.47	6
	21214	1763	BLACK	267	3.66	6.81	M12	3.88	4.72	0.47	6
	21215	2204	BLACK	351	3.66	6.81	M12	3.88	4.72	0.47	6
	21216	2645	BLACK	503	3.66	6.81	M12	3.88	4.72	0.47	7

AMC MECANOCAUCHO
Industrialdea Zona A - Pab. 35.
Asteasu E-20159, Gipuzkoa
Spain
Tel.: +34 843 74 00 13
sales@amcsa.es
www.mecanocaucho.com

In order to adapt its products to the state of the art, Aplicaciones Mecánicas del Caucho, S.A. reserves the right to modify the conception and manufacture of the materials presented in this catalog without prior notice.
Document generated on 23/11/2026.

1V-SR Kit Niv.

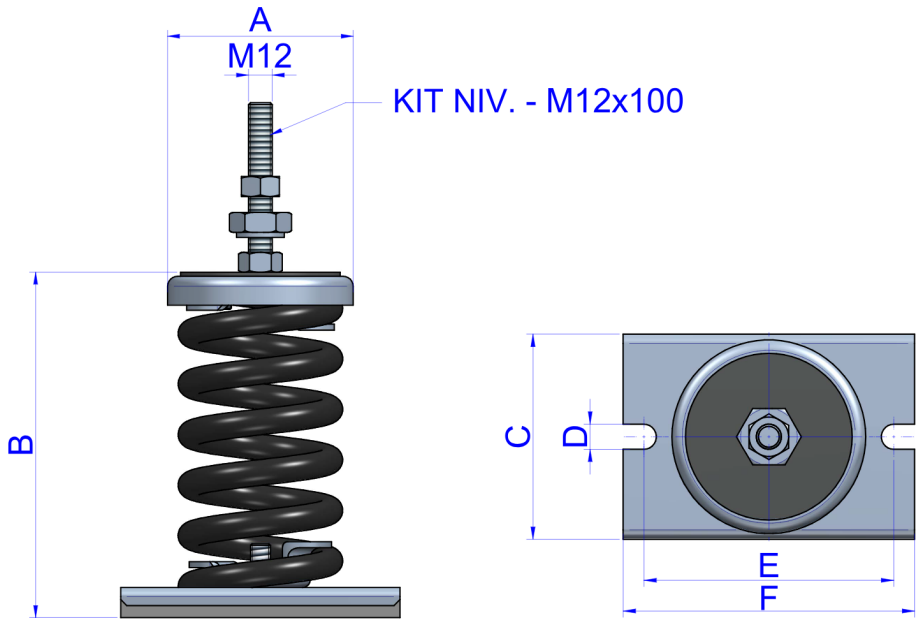

Type	A(in)	B(in)	C(in)	D(in)	E(in)	F(in)	Weight(lbs)	Code	Max. Load(lbs)	Spring color
1V-SR Kit Niv.	3.66	6.81	3.88	0.47	4.72	5.51	5	21225	441	BLACK
								21226	882	BLACK
								21227	1433	BLACK
								21228	1763	BLACK
								21229	2204	BLACK
								21230	2645	BLACK

AMC MECANOCAUCHO
Industrialdea Zona A - Pab. 35.
Asteasu E-20159, Gipuzkoa
Spain
Tel.: +34 843 74 00 13
sales@amcsa.es
www.mecanocaucho.com

In order to adapt its products to the state of the art, Aplicaciones Mecánicas del Caucho, S.A. reserves the right to modify the conception and manufacture of the materials presented in this catalog without prior notice.
Document generated on 23/11/2026.

Elastic properties

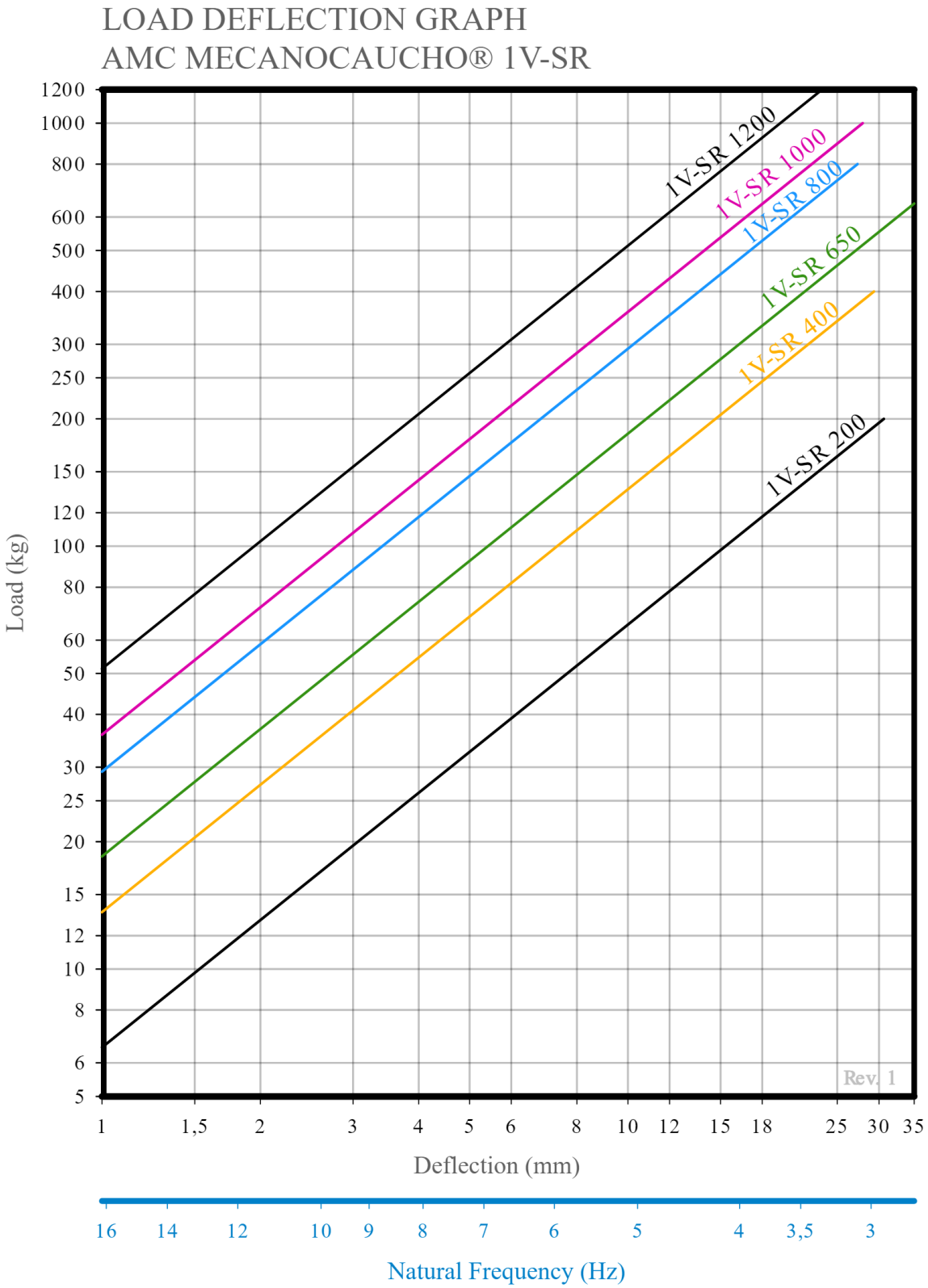

AMC MECANOCAUCHO
Industrialdea Zona A - Pab. 35.
Asteasu E-20159, Gipuzkoa
Spain
Tel.: +34 843 74 00 13
sales@amcsa.es
www.mecanocaucho.com

In order to adapt its products to the state of the art, Aplicaciones Mecánicas del Caucho, S.A. reserves the right to modify the conception and manufacture of the materials presented in this catalog without prior notice.
Document generated on 23/11/2026.

Technical characteristics

The mounts are able to reach low natural frequencies from 3 to 5 Hz. The spring combined with sylomer® is able to provide high isolation at low and medium frequencies.

The curves are showing the deflection and natural frequencies according to the load of the spring. Temperature working range from -30 to 70º. Short term higher temperatures are possible.

Advantages

Easy installation

This mount requires no major modifications to the structure for installation.

Improved isolation

It offers improved isolation compared to conventional anti-vibration mounts of similar geometry.

Incorporates Sylomer® elastomer, highly effective for isolating both high and low frequencies

Sylomer® provides high isolation across a wide frequency range and is particularly effective at high frequencies, effectively eliminating the transmission of structure-borne noise.

AMC MECANOCAUCHO
Industrialdea Zona A - Pab. 35.
Asteasu E-20159, Gipuzkoa
Spain
Tel.: +34 843 74 00 13
sales@amcsa.es
www.mecanocaucho.com

In order to adapt its products to the state of the art, Aplicaciones Mecánicas del Caucho, S.A. reserves the right to modify the conception and manufacture of the materials presented in this catalog without prior notice.
Document generated on 23/11/2026.