1V-SH Spring Isolator

Open high-deflection spring isolator for very low-frequency vibration isolation. Static deflection up to 2 inches (50 mm) and natural frequencies as low as 3 Hz.



The **AMC-MECANOCAUCHO® 1V-SH spring isolator** is designed for applications requiring **very low-frequency vibration isolation**.

With a **static deflection of up to 2 inches (50 mm)**, the spring can achieve **natural frequencies as low as 3 Hz**, providing highly effective isolation for low-speed equipment or machinery generating very low-frequency vibrations.

Its open design provides **no lateral restraint**, so particular attention must be paid to **equipment stability and the position of its center of gravity**.

The spring isolator incorporates a **leveling system** and a **Sylomer® pad**, complementing the action of the spring by improving vibration isolation at medium and high frequencies.

AMC MECANOCAUCHO
Industrialdea Zona A - Pab. 35.
Asteasu E-20159, Gipuzkoa
Spain
Tel.: +34 843 74 00 13
sales@amcsa.es
www.mecanocaucho.com

In order to adapt its products to the state of the art, Aplicaciones Mecánicas del Caucho, S.A. reserves the right to modify the conception and manufacture of the materials presented in this catalog without prior notice.
Document generated on 25/11/2026.

Drawings

1V-SH

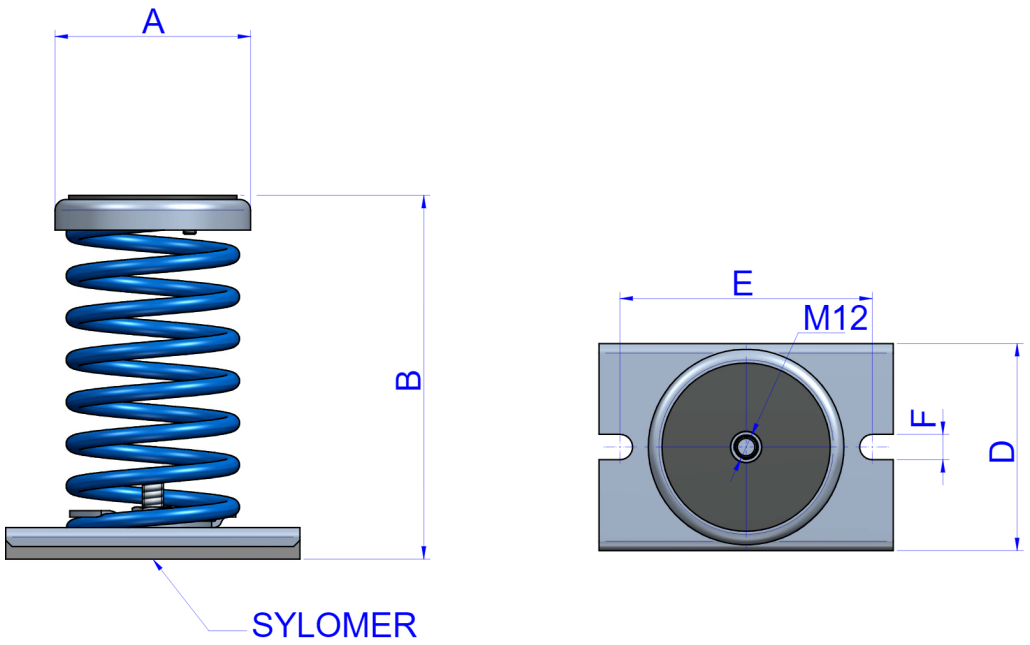

Type	A(in)	B(in)	C(in)	D(in)	E(in)	F(in)	Code	Max. Load(lbs)	Spring color	K(N/mm)	Weight(lbs)
1V-SH	3.66	6.81	M12	3.88	4.72	0.47	21001	148	BLUE	13	4
							21002	209	WHITE	19	4
							21003	271	BLACK	25	4
							21004	381	BEIGE	35	4
							21005	491	RED	43	5
							21006	738	GREY	68	5
							21007	983	GREEN	88	6
							20462	1543	BROWN	150	6

AMC MECANOCAUCHO
Industrialdea Zona A - Pab. 35.
Asteasu E-20159, Gipuzkoa
Spain
Tel.: +34 843 74 00 13
sales@amcsa.es
www.mecanocaucho.com

In order to adapt its products to the state of the art, Aplicaciones Mecánicas del Caucho, S.A. reserves the right to modify the conception and manufacture of the materials presented in this catalog without prior notice.
Document generated on 25/11/2026.

1V-SH Kit Niv.

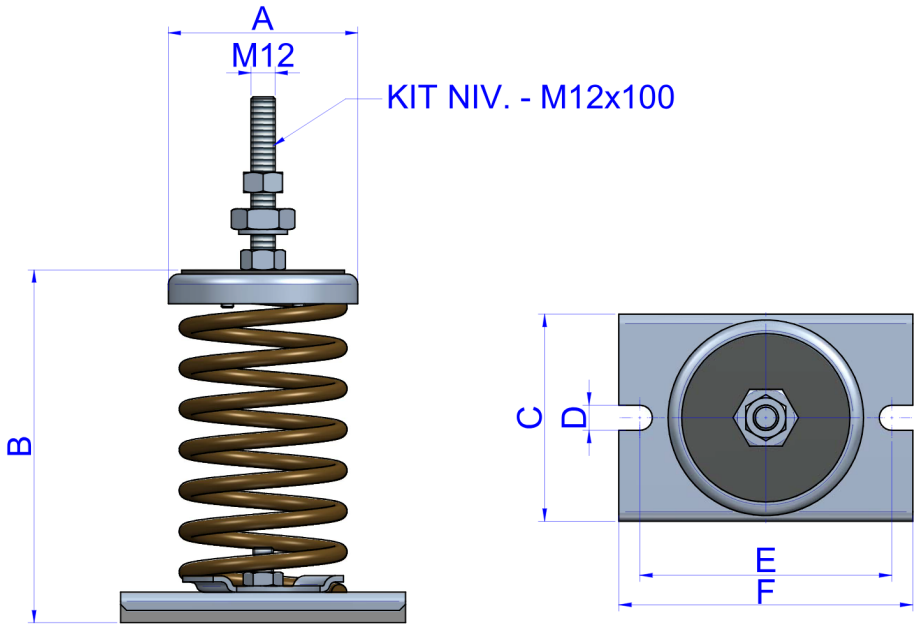

Type	A(in)	B(in)	C(in)	D(in)	E(in)	F(in)	Weight(lbs)	Code	Max. Load(lbs)	Spring color
1V-SH Kit Niv.	3.66	6.81	3.88	0.47	4.72	5.51	4	21231	148	BLUE
								21232	209	WHITE
								21233	271	BLACK
								21234	381	BEIGE
								21235	491	RED
								21236	738	GREY
								21237	983	GREEN
								21238	1543	BROWN

AMC MECANOCAUCHO
Industrialdea Zona A - Pab. 35.
Asteasu E-20159, Gipuzkoa
Spain
Tel.: +34 843 74 00 13
sales@amcsa.es
www.mecanocaucho.com

In order to adapt its products to the state of the art, Aplicaciones Mecánicas del Caucho, S.A. reserves the right to modify the conception and manufacture of the materials presented in this catalog without prior notice.
Document generated on 25/11/2026.

Elastic properties

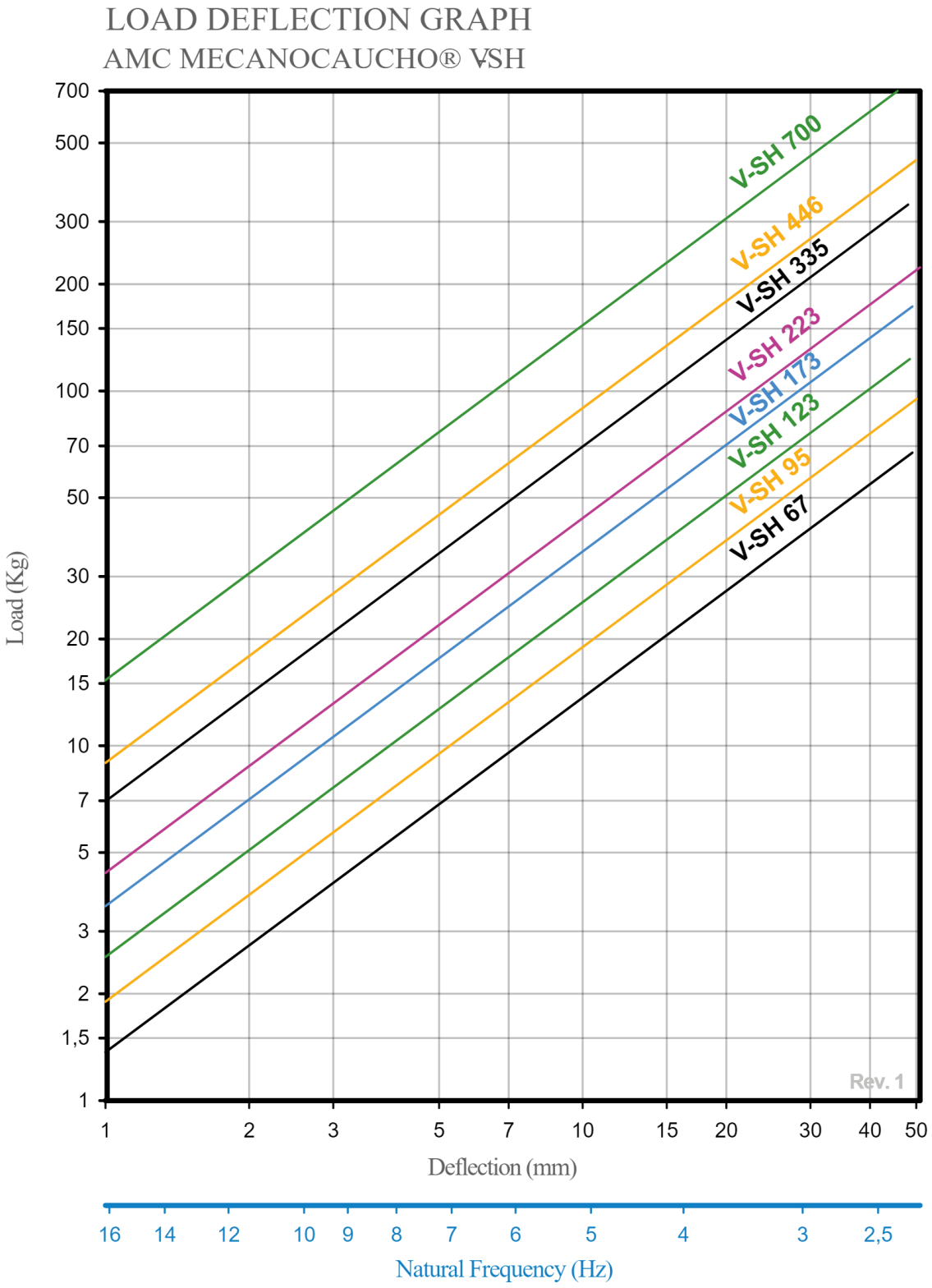

AMC MECANOCAUCHO
Industrialdea Zona A - Pab. 35.
Asteasu E-20159, Gipuzkoa
Spain

Tel.: +34 843 74 00 13

sales@amcsa.es

www.mecanocaucho.com

In order to adapt its products to the state of the art, Aplicaciones Mecánicas del Caucho, S.A. reserves the right to modify the conception and manufacture of the materials presented in this catalog without prior notice.
Document generated on 25/11/2026.

Technical characteristics

The mounts are able to reach low natural frequencies from 2 to 5 Hz. The spring combined with sylomer® is able to provide high isolation at low and medium frequencies.

The curves are showing the deflection and natural frequencies according to the load of the spring. Temperature working range from -30 to 70º. Short term higher temperatures are possible.

Advantages

Easy installation

This mount requires no major modifications to the structure for installation.

Improved isolation

It offers improved isolation compared to conventional anti-vibration mounts of similar geometry.

Incorporates Sylomer® elastomer, highly effective for isolating both high and low frequencies

Sylomer® provides high isolation across a wide frequency range and is particularly effective at high frequencies, effectively eliminating the transmission of structure-borne noise.

AMC MECANOCAUCHO
Industrialdea Zona A - Pab. 35.
Asteasu E-20159, Gipuzkoa
Spain
Tel.: +34 843 74 00 13
sales@amcsa.es
www.mecanocaucho.com

In order to adapt its products to the state of the art, Aplicaciones Mecánicas del Caucho, S.A. reserves the right to modify the conception and manufacture of the materials presented in this catalog without prior notice.
Document generated on 25/11/2026.