# DSM Anti-Vibration Mounts

## Dual-Stiffness Mounts with pre-compressed elastomer, combining effective vibration isolation in normal operation with high stability under dynamic shocks.



The **AMC-MECANOCAUCHO® DSM mounts** are designed to apply a **high level of pre-compression to the elastomer during installation**. This characteristic provides a specific dynamic behaviour, combining **vibration isolation and stability** within the same mount.

Under normal operating conditions, their design provides **effective isolation of vibrations** generated by the equipment. When the system is subjected to **shocks or high dynamic loads**, the behaviour of the mount changes to provide greater control of movements and improve the stability of the suspended equipment.

This combination of **pre-compression, dual stiffness and motion control** makes DSM mounts particularly suitable for **mobile machinery, vehicles, onboard equipment and industrial applications** where vibration isolation and resistance to shocks are required simultaneously.

**AMC MECANOCAUCHO**
Industrialdea Zona A - Pab. 35.
Asteasu E-20159, Gipuzkoa
Spain
Tel.: +34 843 74 00 13
sales@amcsa.es
www.mecanocaucho.com

*In order to adapt its products to the state of the art, Aplicaciones Mecánicas del Caucho, S.A. reserves the right to modify the conception and manufacture of the materials presented in this catalogue without prior notice.*
*Document generated on 23/11/2026.*

# Drawings

## DSM 22 / DSM 83

22

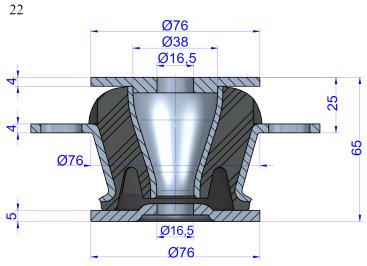


SECTION A-A

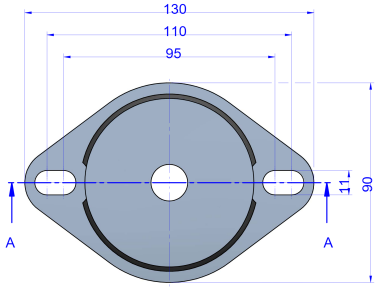


MAX. TIGHTENING TORQUE: 113 Nm

83

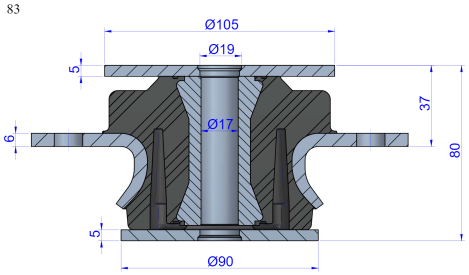


SECTION A-A

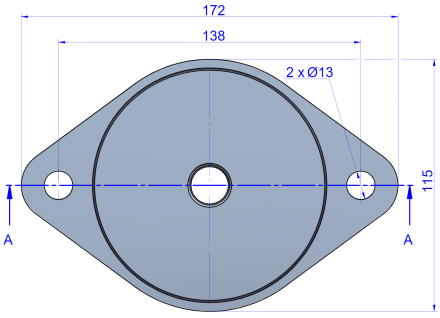


MAX. TIGHTENING TORQUE: 71Nm

| Type | Tightening torque Max. (Nm) | Weight(gr) | Code | Max. Load(kg) | Shore |
|---|---|---|---|---|---|
| DSM 22 | 113 | 850 | 137460 | 250 | 50 Sh |
| DSM 83 | 71 | 2000 | 137461 | 150 | 45 Sh |
| | | | 137462 | 250 | 55 Sh |
| | | | 137463 | 350 | 65 Sh |

**AMC MECANOCAUCHO**
Industrialdea Zona A - Pab. 35.
Asteasu E-20159, Gipuzkoa
Spain
Tel.: +34 843 74 00 13
sales@amcsa.es
www.mecanocaucho.com

*In order to adapt its products to the state of the art, Aplicaciones Mecánicas del Caucho, S.A. reserves the right to modify the conception and manufacture of the materials presented in this catalogue without prior notice.*
*Document generated on 23/11/2026.*

# DSM 141

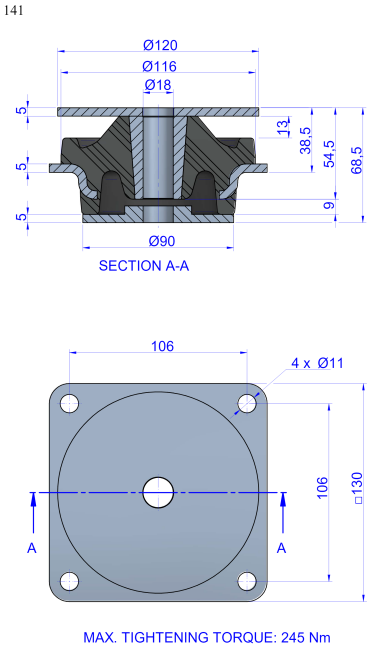


MAX. TIGHTENING TORQUE: 245 Nm

| Type | Tightening torque Max. (Nm) | Weight(gr) | Code | Max. Load(kg) | Shore |
|---|---|---|---|---|---|
| DSM 141 | 245 | 1039 | 137464 | 175 | 50 Sh |
| | | | 137465 | 250 | 60 Sh |

**AMC MECANOCAUCHO**
Industrialdea Zona A - Pab. 35.
Asteasu E-20159, Gipuzkoa
Spain
Tel.: +34 843 74 00 13
sales@amcsa.es
www.mecanocaucho.com

*In order to adapt its products to the state of the art, Aplicaciones Mecánicas del Caucho, S.A. reserves the right to modify the conception and manufacture of the materials presented in this catalogue without prior notice.*
*Document generated on 23/11/2026.*

# Elastic properties

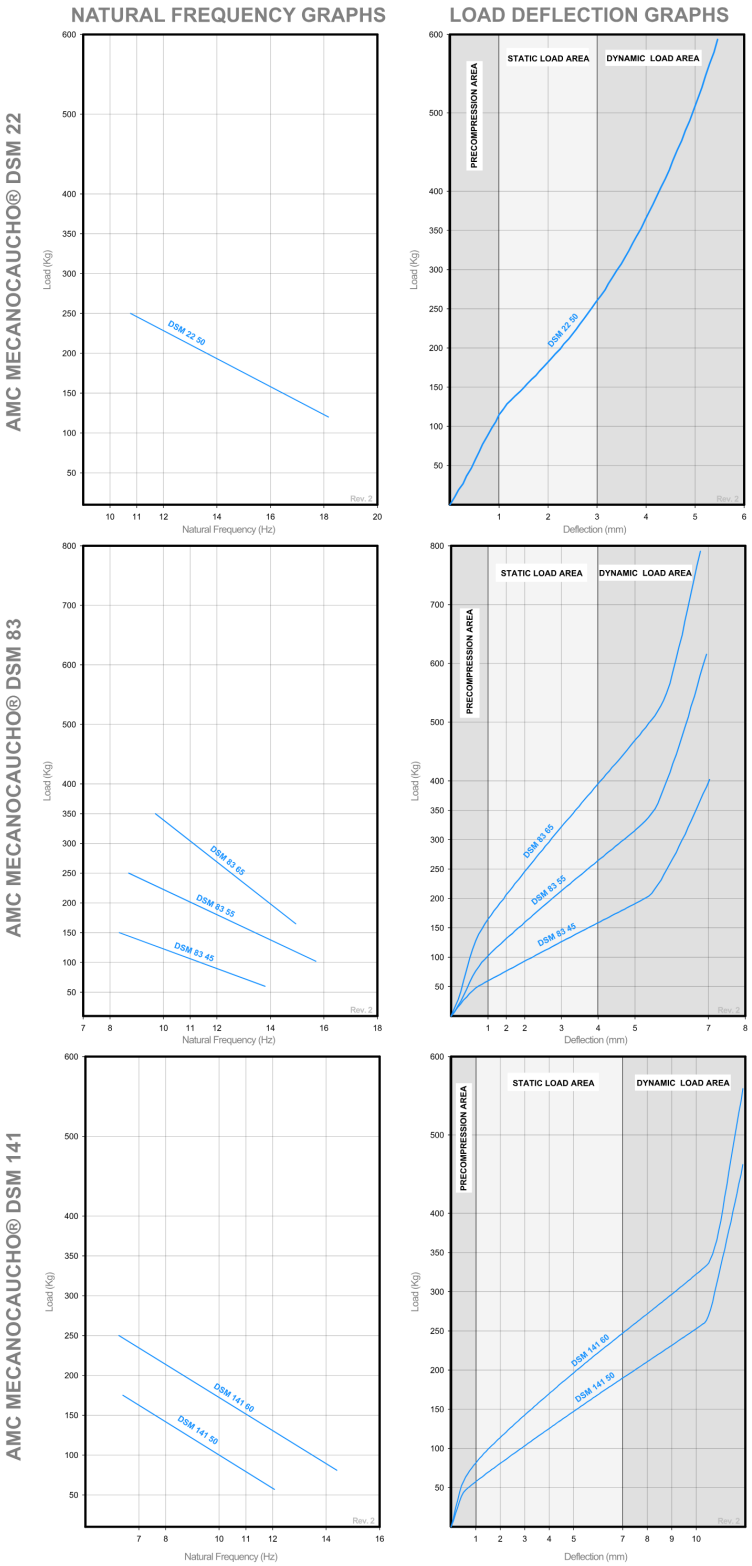


**AMC MECANOCAUCHO**
Industrialdea Zona A - Pab. 35.
Asteasu E-20159, Gipuzkoa
Spain

Tel.: +34 843 74 00 13

sales@amcsa.es

www.mecanocaucho.com

*In order to adapt its products to the state of the art, Aplicaciones Mecánicas del Caucho, S.A. reserves the right to modify the conception and manufacture of the materials presented in this catalogue without prior notice.*
*Document generated on 23/11/2026.*

**AMC MECANOCAUCHO**
Industrialdea Zona A - Pab. 35.
Asteasu E-20159, Gipuzkoa
Spain

Tel.: +34 843 74 00 13

sales@amcsa.es

www.mecanocaucho.com

*In order to adapt its products to the state of the art, Aplicaciones Mecánicas del Caucho, S.A. reserves the right to modify the conception and manufacture of the materials presented in this catalogue without prior notice.*
*Document generated on 23/11/2026.*