ST + SYLOMER®

Spring and Sylomer® acoustic hanger for high-performance vibration isolation across a broad frequency range. Ideal for ductwork and suspended mechanical systems.



The **ST + SYLOMER® acoustic hanger** is designed for high-performance vibration isolation in building services and stationary mechanical applications where effective reduction of **structure-borne noise** is required.

The system combines a **low-stiffness steel spring** with a **Sylomer® microcellular polyurethane element**, providing effective isolation across a broad frequency range. The spring provides excellent isolation at low frequencies, while the Sylomer® element helps attenuate higher-frequency vibration and structure-borne noise.

With natural frequencies typically in the **3–4 Hz range**, ST + SYLOMER® hangers are particularly suitable for equipment operating at relatively low speeds, including applications in the **600–1,000 rpm range**, where conventional rubber hangers may not provide sufficient isolation.

AMC MECANOCAUCHO
Industrialdea Zona A - Pab. 35.
Asteasu E-20159, Gipuzkoa
Spain
Tel.: +34 843 74 00 13
sales@amcsa.es
www.mecanocaucho.com

In order to adapt its products to the state of the art, Aplicaciones Mecánicas del Caucho, S.A. reserves the right to modify the conception and manufacture of the materials presented in this catalog without prior notice.
Document generated on 23/11/2026.

Drawings

ST + Sylomer® ST-5 Type C / ST + Sylomer® ST-10 Type C / ST + Sylomer® ST-20 Type C / ST + Sylomer® ST-30 Type C / ST + Sylomer® ST-60 Type C

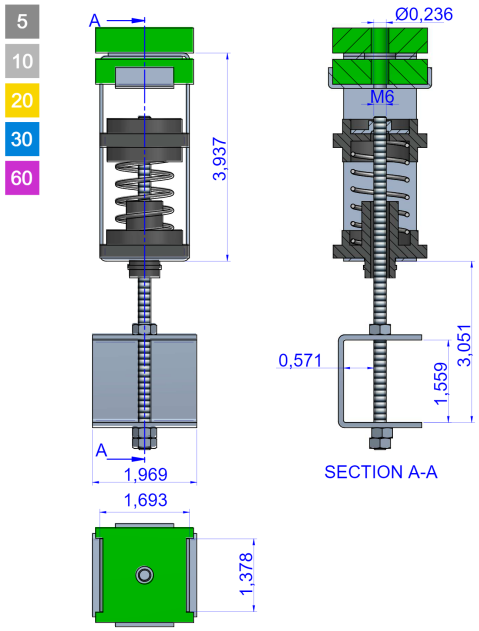

Type	Max. Permanent Load (lbs)	Spring color	Code
ST + Sylomer® ST-5 Type C	11	Silver	25606
ST + Sylomer® ST-10 Type C	22	White	25607
ST + Sylomer® ST-20 Type C	44	Yellow	25608
ST + Sylomer® ST-30 Type C	66	Blue	25609
ST + Sylomer® ST-60 Type C	132	Magenta	25610

AMC MECANOCAUCHO
Industrialdea Zona A - Pab. 35.
Asteasu E-20159, Gipuzkoa
Spain
Tel.: +34 843 74 00 13
sales@amcsa.es
www.mecanocaucho.com

In order to adapt its products to the state of the art, Aplicaciones Mecánicas del Caucho, S.A. reserves the right to modify the conception and manufacture of the materials presented in this catalog without prior notice.
Document generated on 23/11/2026.

ST + Sylomer® ST-5 Type D / ST + Sylomer® ST-10 Type D / ST + Sylomer® ST-20 Type D / ST + Sylomer® ST-30 Type D / ST + Sylomer® ST-60 Type D

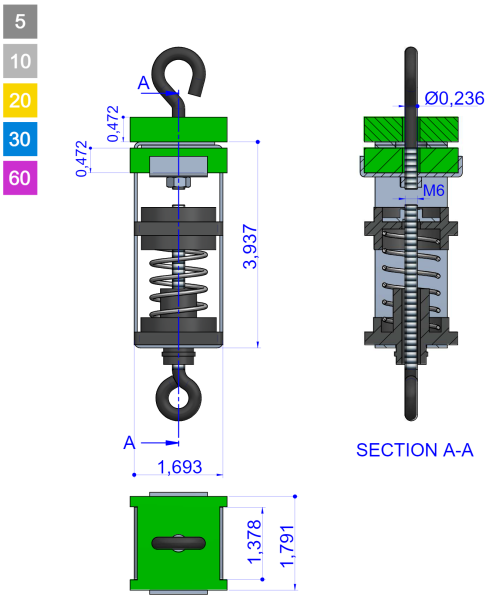

Type	Max. Permanent Load (lbs)	Spring color	Code
ST + Sylomer® ST-5 Type D	11	Silver	23082
ST + Sylomer® ST-10 Type D	22	White	23083
ST + Sylomer® ST-20 Type D	44	Yellow	23084
ST + Sylomer® ST-30 Type D	66	Blue	23085
ST + Sylomer® ST-60 Type D	132	Magenta	23086

AMC MECANOCAUCHO
Industrialdea Zona A - Pab. 35.
Asteasu E-20159, Gipuzkoa
Spain
Tel.: +34 843 74 00 13
sales@amcsa.es
www.mecanocaucho.com

In order to adapt its products to the state of the art, Aplicaciones Mecánicas del Caucho, S.A. reserves the right to modify the conception and manufacture of the materials presented in this catalog without prior notice.
Document generated on 23/11/2026.

Technical characteristics

The design of these acoustic hangers is composed of:

- 1. Metal parts that are mechanically failsafe.
- 2. A rubber moulded part equipped with an end stroke buffer if ever the **acoustic hanger** is overloaded.
- 3. A prime degree steel coil spring to provide low natural frequency to the acoustic hanger.
- 4. A Sylomer® layer to isolate mid-high frequencies that could travel through the coil spring.

These mounts are equipped with different types of coil springs to suit different loading applications from 5 to 60 Kg per hanger.

AMC MECANOCAUCHO
Industrialdea Zona A - Pab. 35.
Asteasu E-20159, Gipuzkoa
Spain
Tel.: +34 843 74 00 13
sales@amcsa.es
www.mecanocaucho.com

In order to adapt its products to the state of the art, Aplicaciones Mecánicas del Caucho, S.A. reserves the right to modify the conception and manufacture of the materials presented in this catalog without prior notice.
Document generated on 23/11/2026.