VT Spring Hanger

Spring hanger for suspended ceilings and machinery operating above 450 rpm. Natural frequencies from 3 to 5 Hz for outstanding low-frequency vibration isolation.



The AMC-MECANOCAUCHO® VT Spring Hanger range is designed for the suspension of acoustic ceilings and machinery requiring exceptional low-frequency vibration isolation.

Each hanger incorporates a high-performance steel spring and an elastomer bushing that prevents acoustic bridging while accommodating minor screw misalignment during installation. This combination ensures optimum vibration isolation, reliable long-term performance, and easy installation.

The robust steel housing is protected with a corrosion-resistant zinc-plated finish for long service life in demanding environments.

AMC MECANOCAUCHO
Industrialdea Zona A - Pab. 35.
Asteasu E-20159, Gipuzkoa
Spain
Tel.: +34 843 74 00 13
sales@amcsa.es
www.mecanocaucho.com

In order to adapt its products to the state of the art, Aplicaciones Mecánicas del Caucho, S.A. reserves the right to modify the conception and manufacture of the materials presented in this catalogue without prior notice.
Document generated on 23/11/2026.

Drawings

VT 8 / VT 15 / VT 25 / VT 50 / VT 75 / VT 100 / VT 125 / VT 150R

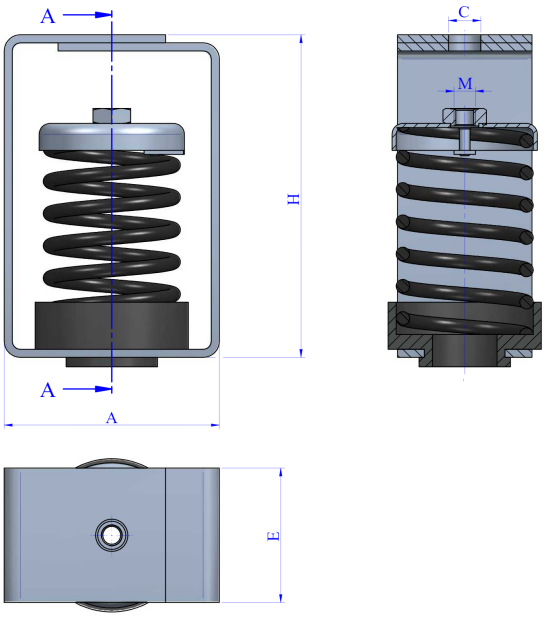

Type	Max. Permanent Load (kg)	Spring color	A(mm)	C(mm)	E(mm)	H(mm)	Code	M	Weight(kg)
VT 8	8	BLACK	80	12	50	120	20199	M-8	0.71
							21399	M-10	0.624
VT 15	15	BLACK	80	12	50	120	20200	M-8	0.71
							21400	M-10	0.624
VT 25	25	BLACK	80	12	50	120	20201	M-8	0,71
							21401	M-10	0.704
VT 50	50	BLUE	80	12	50	120	20202	M-8	0,7
							21402	M-10	0.69
VT 75	75	GREY	80	12	50	120	20203	M-8	0,72
							21403	M-10	0.726
VT 100	100	BEIGE	80	12	50	120	20204	M-8	0,778
							21404	M-10	0.742
VT 125	125	WHITE	80	12	50	120	20211	M-8	0,742
							21405	M-10	0.75
VT 150R	150	BLACK	80	12	50	120	20224	M-8	0.77
							21406	M-10	0.774

AMC MECANOCAUCHO
Industrialdea Zona A - Pab. 35.
Asteasu E-20159, Gipuzkoa
Spain
Tel.: +34 843 74 00 13
sales@amcsa.es
www.mecanocaucho.com

In order to adapt its products to the state of the art, Aplicaciones Mecánicas del Caucho, S.A. reserves the right to modify the conception and manufacture of the materials presented in this catalogue without prior notice.
Document generated on 23/11/2026.

VT 150

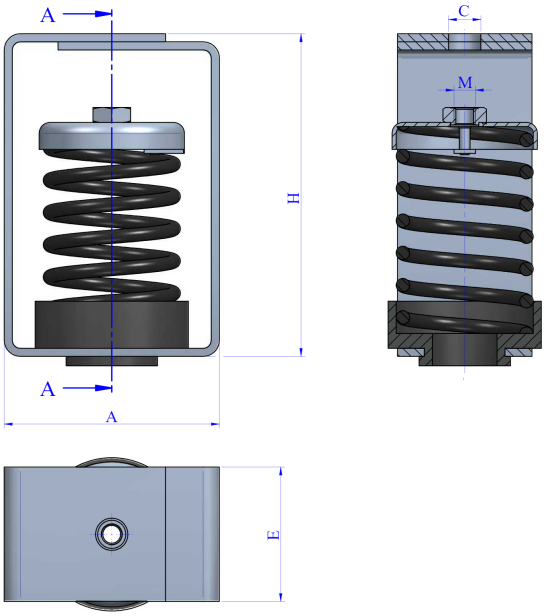

Type	Max. Permanent Load (kg)	Spring color	A(mm)	C(mm)	E(mm)	H(mm)	M	Code	Weight(kg)
VT 150	150	BLUE	120	16	80	160	M-12	20205	2,035

VT 200

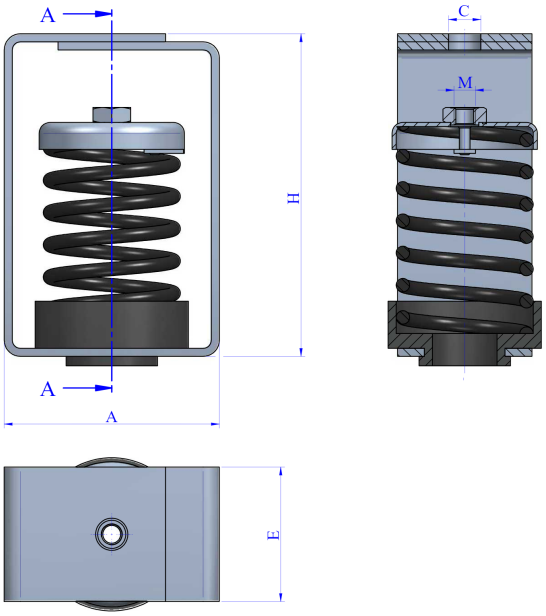

Type	Max. Permanent Load (kg)	Spring color	A(mm)	C(mm)	E(mm)	H(mm)	M	Code	Weight(kg)
VT 200	200	WHITE	120	16	80	160	M-12	20210	2,072

AMC MECANOCAUCHO
Industrialdea Zona A - Pab. 35.
Asteasu E-20159, Gipuzkoa
Spain
Tel.: +34 843 74 00 13
sales@amcsa.es
www.mecanocaucho.com

In order to adapt its products to the state of the art, Aplicaciones Mecánicas del Caucho, S.A. reserves the right to modify the conception and manufacture of the materials presented in this catalogue without prior notice.
Document generated on 23/11/2026.

VT 250

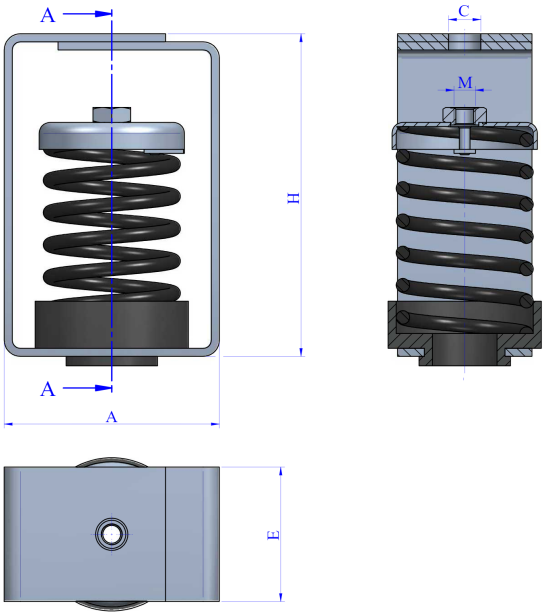

Type	Max. Permanent Load (kg)	Spring color	A(mm)	C(mm)	E(mm)	H(mm)	M	Code	Weight(kg)
VT 250	250	BLACK	120	16	80	160	M-12	20206	2,148

VT 350

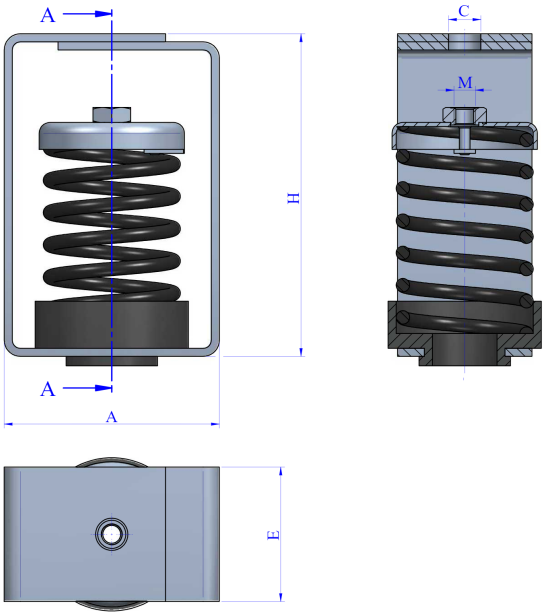

Type	Max. Permanent Load (kg)	Spring color	A(mm)	C(mm)	E(mm)	H(mm)	M	Code	Weight(kg)
VT 350	350	CREAM	120	16	80	160	M-12	20207	2,33

AMC MECANOCAUCHO
Industrialdea Zona A - Pab. 35.
Asteasu E-20159, Gipuzkoa
Spain
Tel.: +34 843 74 00 13
sales@amcsa.es
www.mecanocaucho.com

In order to adapt its products to the state of the art, Aplicaciones Mecánicas del Caucho, S.A. reserves the right to modify the conception and manufacture of the materials presented in this catalogue without prior notice.
Document generated on 23/11/2026.

VT 500

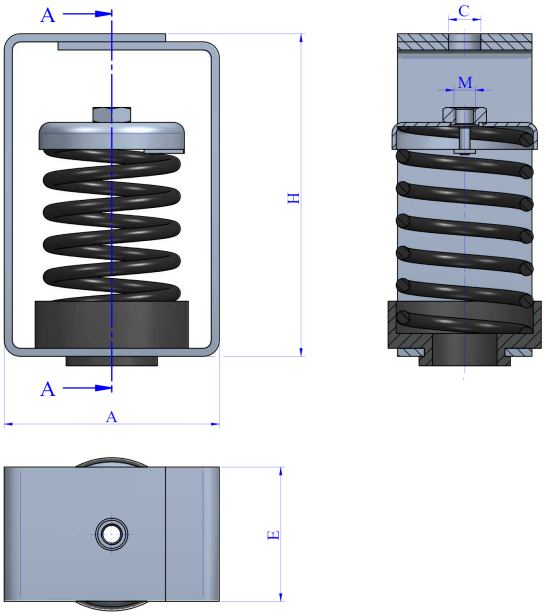

Type	Max. Permanent Load (kg)	Spring color	A(mm)	C(mm)	E(mm)	H(mm)	M	Code	Weight(kg)
VT 500	500	LIGHT GREY	140	18	100	180	M-14	20208	4,785

VT 750

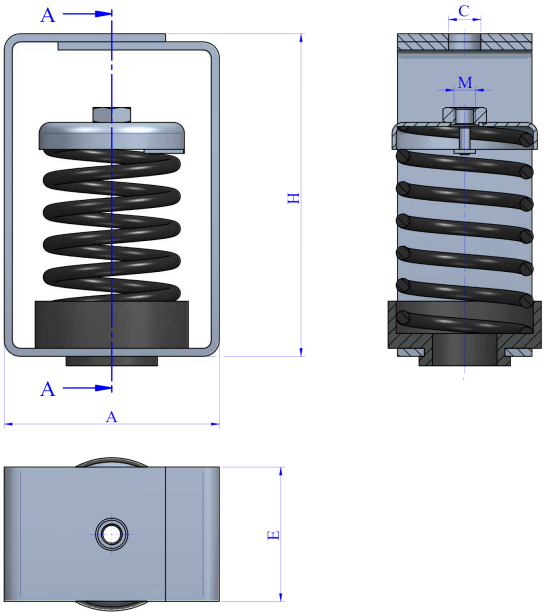

Type	Max. Permanent Load (kg)	Spring color	A(mm)	C(mm)	E(mm)	H(mm)	M	Code	Weight(kg)
VT 750	750	GREEN	140	18	100	180	M-14	20209	5,249

AMC MECANOCAUCHO
Industrialdea Zona A - Pab. 35.
Asteasu E-20159, Gipuzkoa
Spain
Tel.: +34 843 74 00 13
sales@amcsa.es
www.mecanocaucho.com

In order to adapt its products to the state of the art, Aplicaciones Mecánicas del Caucho, S.A. reserves the right to modify the conception and manufacture of the materials presented in this catalogue without prior notice.
Document generated on 23/11/2026.

Elastic properties

LOAD DEFLECTION GRAPH

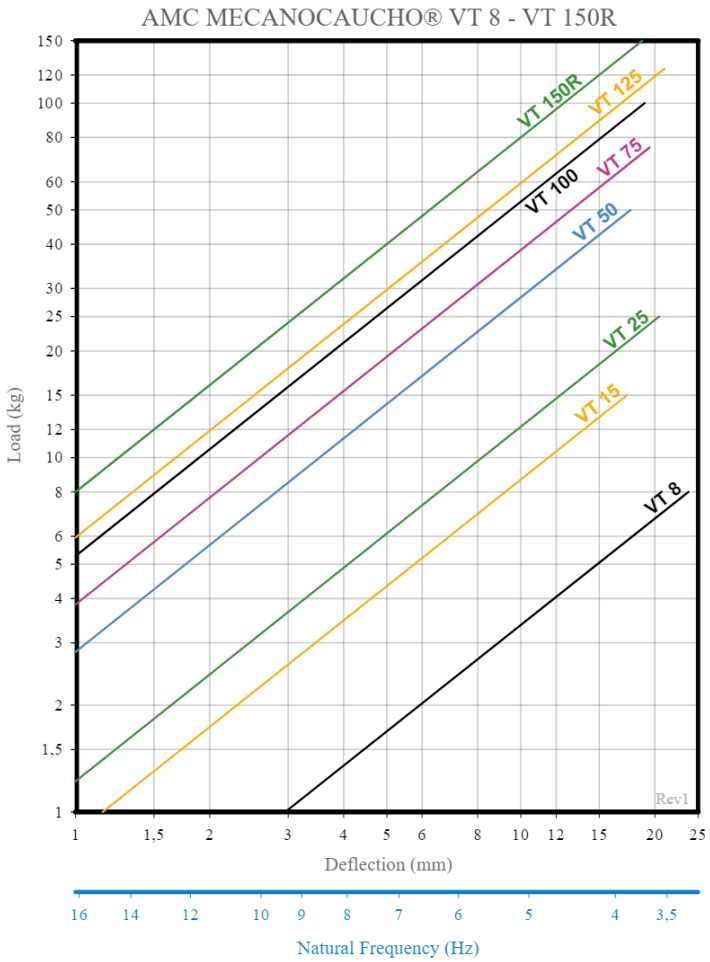

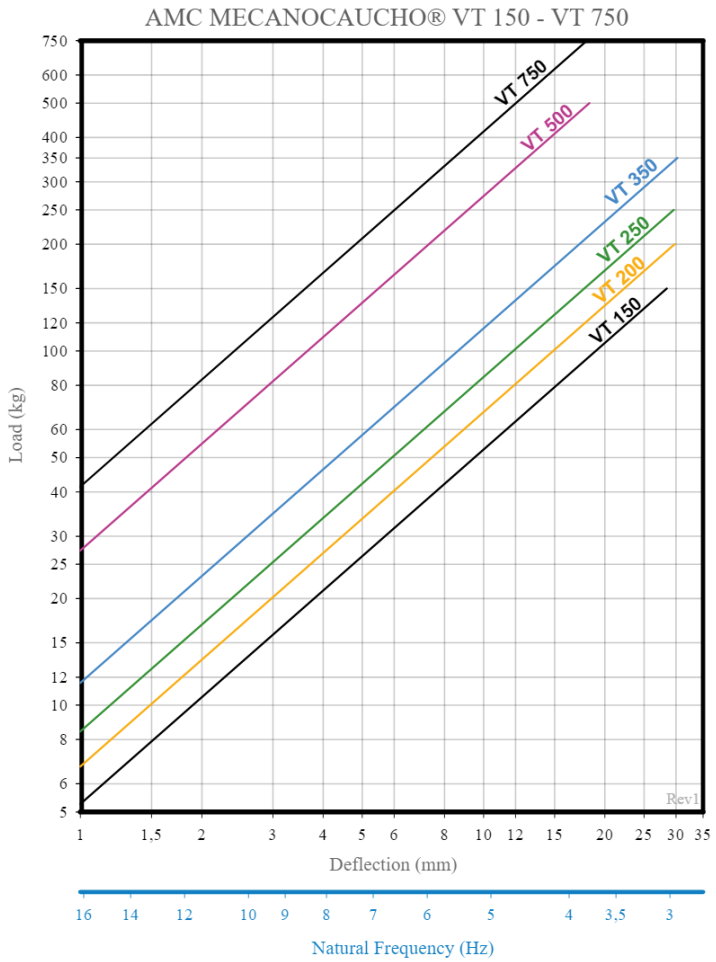

AMC MECANOCAUCHO
Industrialdea Zona A - Pab. 35.
Asteasu E-20159, Gipuzkoa
Spain
Tel.: +34 843 74 00 13
sales@amcsa.es
www.mecanocaucho.com

In order to adapt its products to the state of the art, Aplicaciones Mecánicas del Caucho, S.A. reserves the right to modify the conception and manufacture of the materials presented in this catalogue without prior notice.
Document generated on 23/11/2026.

Technical characteristics

NEVER METAL TO METAL CONTACT

The hanger has a clearance that allows the threaded rod to swing within a 35° angle envelope to absorb irregularities in the ceiling.

Advantages

Improved isolation

It offers improved isolation compared with conventional anti-vibration mounts of similar geometry.

Easy Installation

This mount requires minimal structural modifications, making installation quick and straightforward.

AMC MECANOCAUCHO
Industrialdea Zona A - Pab. 35.
Asteasu E-20159, Gipuzkoa
Spain
Tel.: +34 843 74 00 13
sales@amcsa.es
www.mecanocaucho.com

In order to adapt its products to the state of the art, Aplicaciones Mecánicas del Caucho, S.A. reserves the right to modify the conception and manufacture of the materials presented in this catalogue without prior notice.
Document generated on 23/11/2026.