# CB Mount

## Pair-mounted anti-vibration mount providing high radial elasticity, protection against elastomer fatigue and excellent resistance to dynamic loads.



The **AMC-MECANOCAUCHO® CB anti-vibration mounts** are designed to be **installed in pairs**, on either side of the chassis or structure to be isolated. Installation is particularly simple, using **a single through-bolt** with washers positioned at both ends of the assembly.

The CB mount incorporates **metal reinforcement in the radial working area**, preventing direct contact between the elastomer and sharp edges around the mounting holes, particularly when these are produced by **laser cutting** . This design helps to **reduce stress concentrations and elastomer fatigue**.

It also allows the use of simple mounting holes **without the need to machine radii or chamfers**, simplifying assembly and helping to reduce manufacturing and installation costs.

Thanks to its **high radial elasticity** and **multidirectional bump-stop behaviour**, the CB mount effectively isolates vibrations and absorbs shocks while limiting excessive movement. It is particularly suitable for **mobile machinery, cabins, onboard equipment and applications subjected to high dynamic loads**.

**AMC MECANOCAUCHO**
Industrialdea Zona A - Pab. 35.
Asteasu E-20159, Gipuzkoa
Spain
Tel.: +34 843 74 00 13
sales@amcsa.es
www.mecanocaucho.com

*In order to adapt its products to the state of the art, Aplicaciones Mecánicas del Caucho, S.A. reserves the right to modify the conception and manufacture of the materials presented in this catalogue without prior notice.*
*Document generated on 23/11/2026.*

# Drawings

## CB 40

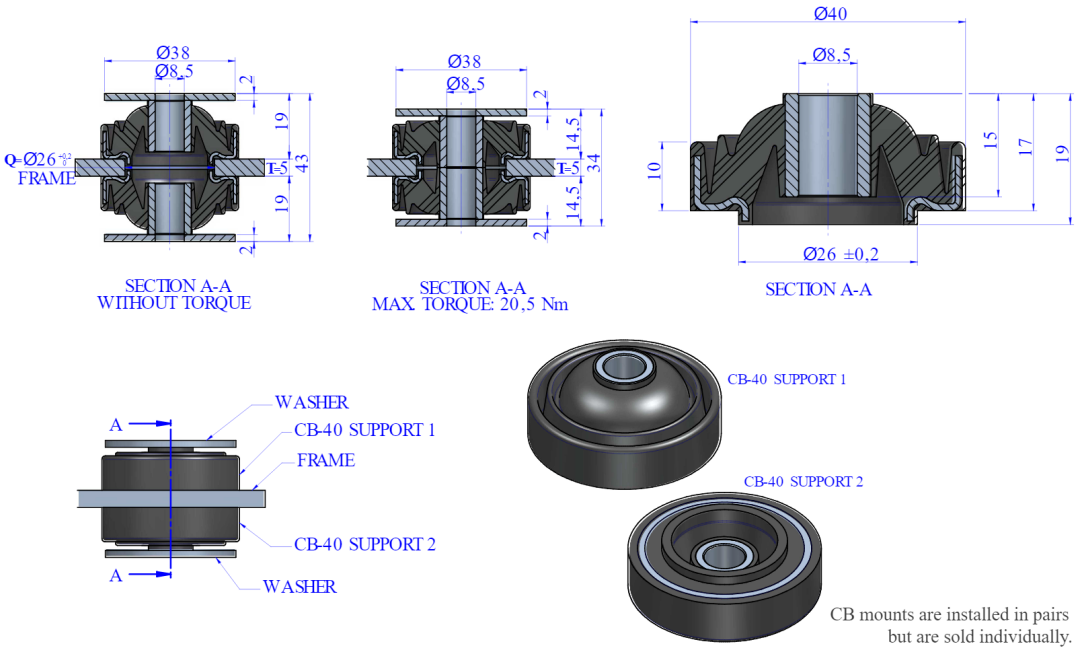


| Type | Tightening torque Max. (Nm) | T Max.(mm) | T Min.(mm) | Q(mm) | Weight(gr) | Washer | Bolt Size (Metric) | Bolt Size (Imperial) | Code | Max. Load (kg) | Shore |
|---|---|---|---|---|---|---|---|---|---|---|---|
| CB 40 | 20,5 | 5 | 5 | 26 | 30 | 610053 | M8 | 5/16" | 156070 | 8 | 45Sh |
| | | | | | | | | | 156071 | 18 | 55Sh |
| | | | | | | | | | 156072 | 25 | 65Sh |

**AMC MECANOCAUCHO**
Industrialdea Zona A - Pab. 35.
Asteasu E-20159, Gipuzkoa
Spain
Tel.: +34 843 74 00 13
sales@amcsa.es
www.mecanocaucho.com

*In order to adapt its products to the state of the art, Aplicaciones Mecánicas del Caucho, S.A. reserves the right to modify the conception and manufacture of the materials presented in this catalogue without prior notice.*
*Document generated on 23/11/2026.*

# CB 60

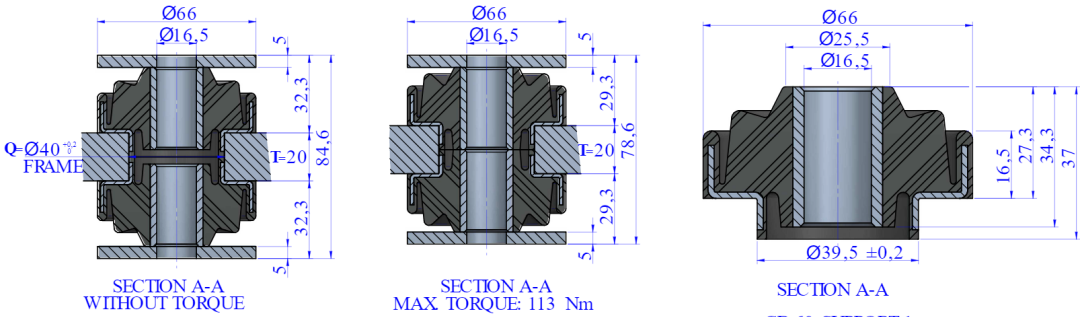


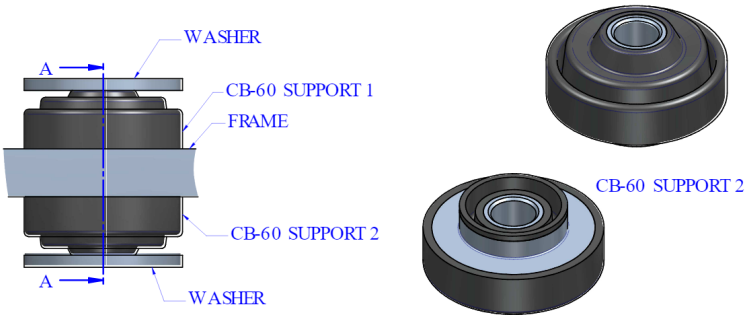


CB mounts are installed in pairs
but are sold individually.

| Type | Tightening torque Max. (Nm) | T Max.(mm) | T Min.(mm) | Q(mm) | Weight(gr) | Washer | Bolt Size (Metric) | Bolt Size (Imperial) | Code | Max. Load (kg) | Shore |
|---|---|---|---|---|---|---|---|---|---|---|---|
| CB 60 | 113 | 20 | 20 | 40 | 140 | 606130 | M16 | 5/8" | 156011 | 70 | 45 Sh |
| | | | | | | | | | 156013 | 120 | 55 Sh |
| | | | | | | | | | 156014 | 170 | 65 Sh |

**AMC MECANOCAUCHO**
Industrialdea Zona A - Pab. 35.
Asteasu E-20159, Gipuzkoa
Spain
Tel.: +34 843 74 00 13
sales@amcsa.es
www.mecanocaucho.com

*In order to adapt its products to the state of the art, Aplicaciones Mecánicas del Caucho, S.A. reserves the right to modify the conception and manufacture of the materials presented in this catalogue without prior notice.*
*Document generated on 23/11/2026.*

# CB 65

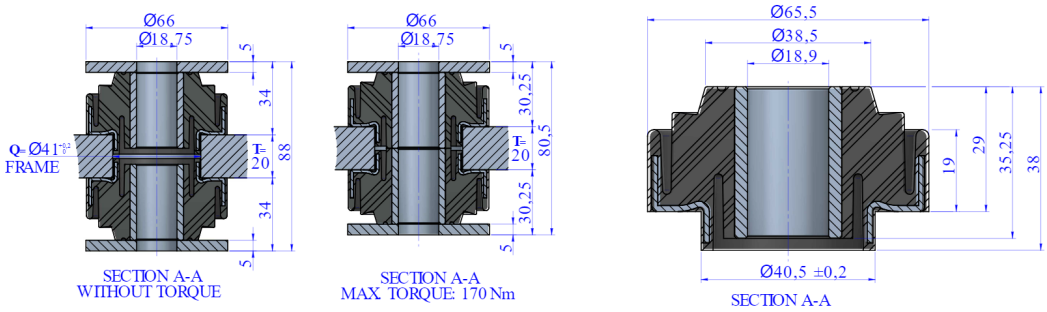


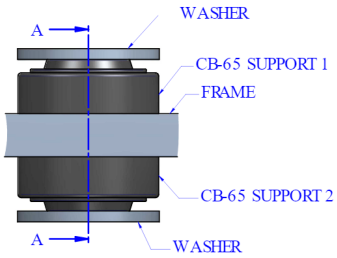





CB mounts are installed in pairs but are sold individually.

| Type | Tightening torque Max. (Nm) | T Max.(mm) | T Min.(mm) | Q(mm) | Weight(gr) | Washer | Bolt Size (Metric) | Bolt Size (Imperial) | Code | Max. Load (kg) | Shore |
|---|---|---|---|---|---|---|---|---|---|---|---|
| CB 65 | 170 | 20 | 20 | 41 | 175 | 706004 | M18 | 11/16" | 156031 | 70 | 45 Sh |
| | | | | | | | | | 156032 | 120 | 55 Sh |
| | | | | | | | | | 156033 | 170 | 65 Sh |

**AMC MECANOCAUCHO**
Industrialdea Zona A - Pab. 35.
Asteasu E-20159, Gipuzkoa
Spain
Tel.: +34 843 74 00 13
sales@amcsa.es
www.mecanocaucho.com

*In order to adapt its products to the state of the art, Aplicaciones Mecánicas del Caucho, S.A. reserves the right to modify the conception and manufacture of the materials presented in this catalogue without prior notice.*
*Document generated on 23/11/2026.*

# CB 76

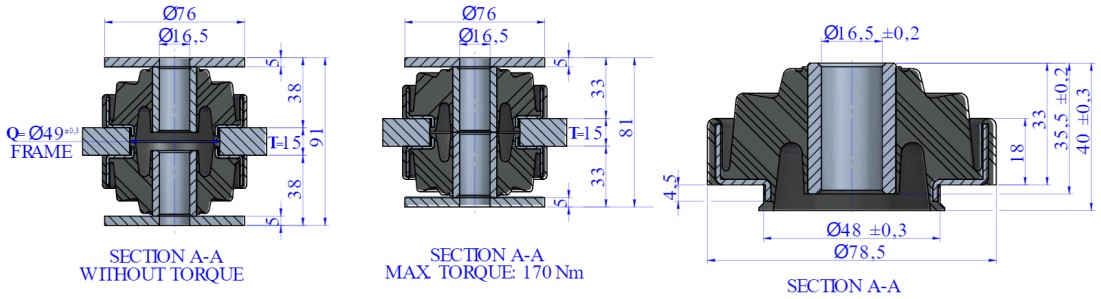


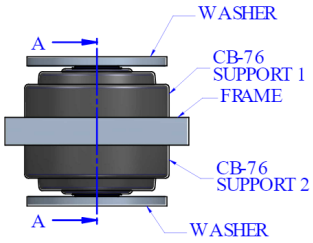


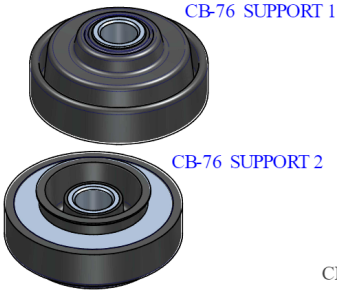


CB mounts are installed in pairs
but are sold individually.

| Type | Tightening torque Max. (Nm) | T Max.(mm) | T Min.(mm) | Q(mm) | Weight(gr) | Washer | Bolt Size (Metric) | Bolt Size (Imperial) | Code | Max. Load (kg) | Shore |
|---|---|---|---|---|---|---|---|---|---|---|---|
| CB 76 | 170 | 15 | 15 | 49 | 223 | 608074 | M16 | 5/8" | 156053 | 60 | 45 Sh |
| | | | | | | | | | 156054 | 90 | 55 Sh |
| | | | | | | | | | 156055 | 150 | 65 Sh |
| | | | | | | | | | 156056 | 200 | 75 Sh |

**AMC MECANOCAUCHO**
Industrialdea Zona A - Pab. 35.
Asteasu E-20159, Gipuzkoa
Spain
Tel.: +34 843 74 00 13
sales@amcsa.es
www.mecanocaucho.com

*In order to adapt its products to the state of the art, Aplicaciones Mecánicas del Caucho, S.A. reserves the right to modify the conception and manufacture of the materials presented in this catalogue without prior notice.*
*Document generated on 23/11/2026.*

# CB 80

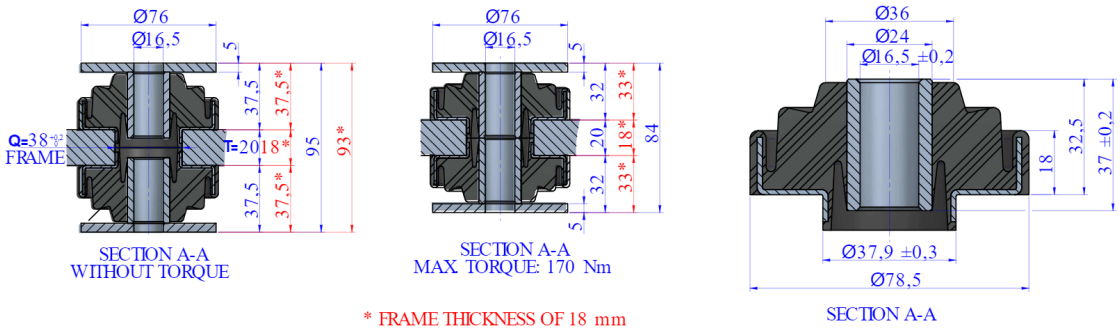


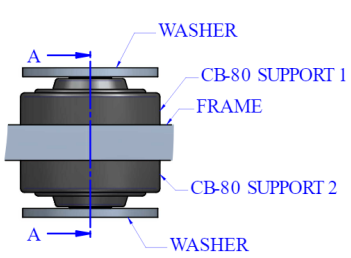


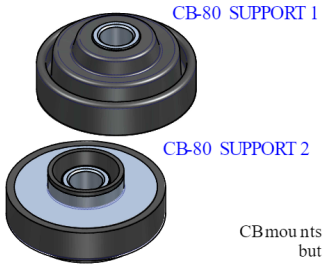


CB mounts are installed in pairs but are sold individually.

| Type | Tightening torque Max. (Nm) | T Max.(mm) | T Min.(mm) | Q(mm) | Weight(gr) | Washer | Bolt Size (Metric) | Bolt Size (Imperial) | Code | Max. Load (kg) | Shore |
|---|---|---|---|---|---|---|---|---|---|---|---|
| CB 80 | 170 | 20 | 18 | 38 | 242 | 608074 | M16 | 5/8" | 156001 | 90 | 45 Sh |
| | | | | | | | | | 156002 | 140 | 55 Sh |
| | | | | | | | | | 156003 | 200 | 65 Sh |

**AMC MECANOCAUCHO**
Industrialdea Zona A - Pab. 35.
Asteasu E-20159, Gipuzkoa
Spain
Tel.: +34 843 74 00 13
sales@amcsa.es
www.mecanocaucho.com

*In order to adapt its products to the state of the art, Aplicaciones Mecánicas del Caucho, S.A. reserves the right to modify the conception and manufacture of the materials presented in this catalogue without prior notice.*
*Document generated on 23/11/2026.*

# CB 110

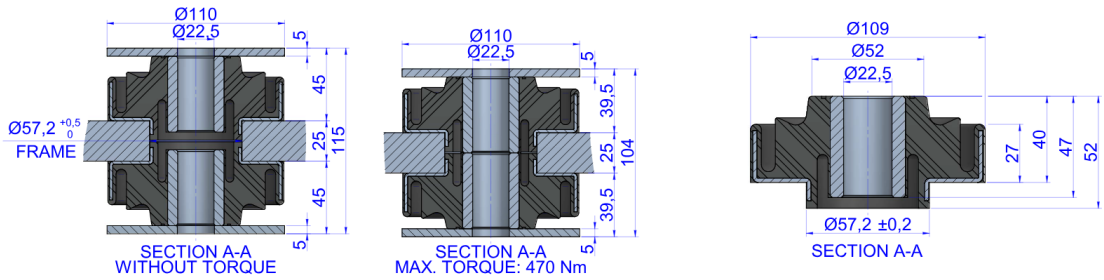


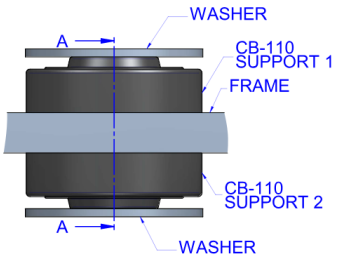





CB mounts are installed in pairs but are sold individually.

| Type | Tightening torque Max. (Nm) | T Max.(mm) | T Min.(mm) | Q(mm) | Weight(gr) | Washer | Bolt Size (Metric) | Bolt Size (Imperial) | Code | Max. Load (kg) | Shore |
|---|---|---|---|---|---|---|---|---|---|---|---|
| CB 110 | 470 | 25 | 25 | Ø 57,2 mm +0.5 / -0 | 630 | 610192 | M22 \| M20 | 7/8" \| 3/4" | 156021 | 235 | 45 Sh |
| | | | | | | | | | 156022 | 375 | 55 Sh |
| | | | | | | | | | 156023 | 550 | 65 Sh |

**AMC MECANOCAUCHO**
Industrialdea Zona A - Pab. 35.
Asteasu E-20159, Gipuzkoa
Spain
Tel.: +34 843 74 00 13
sales@amcsa.es
www.mecanocaucho.com

*In order to adapt its products to the state of the art, Aplicaciones Mecánicas del Caucho, S.A. reserves the right to modify the conception and manufacture of the materials presented in this catalogue without prior notice.*
*Document generated on 23/11/2026.*

## CB 125

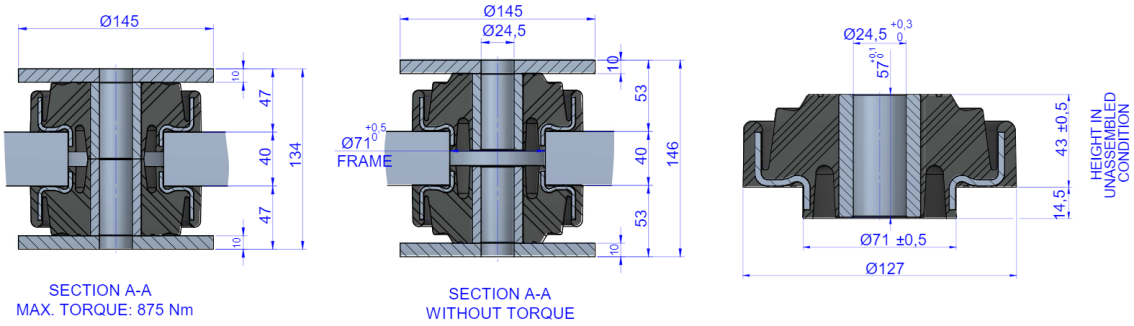


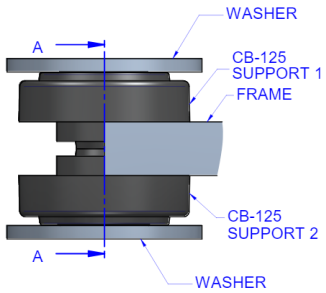





CB mounts are installed in pairs but are sold individually.

| Type | Tightening torque Max. (Nm) | T Max.(mm) | T Min.(mm) | Q(mm) | Weight(gr) | Washer | Bolt Size (Metric) | Bolt Size (Imperial) | Code | Max. Load (kg) | Shore |
|---|---|---|---|---|---|---|---|---|---|---|---|
| CB 125 | 875 | 40 | 40 | 71 | 1000 | 608529 | M24 | 15/16" | 156089 | 500 | 55 Sh |
| | | | | | | | | | 156090 | 800 | 75 Sh |

**AMC MECANOCAUCHO**
Industrialdea Zona A - Pab. 35.
Asteasu E-20159, Gipuzkoa
Spain
Tel.: +34 843 74 00 13
sales@amcsa.es
www.mecanocaucho.com

*In order to adapt its products to the state of the art, Aplicaciones Mecánicas del Caucho, S.A. reserves the right to modify the conception and manufacture of the materials presented in this catalogue without prior notice.*
*Document generated on 23/11/2026.*

# CB 130

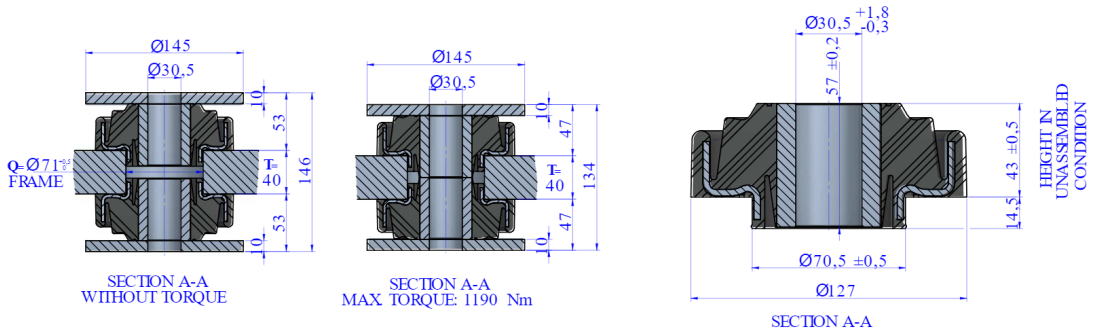


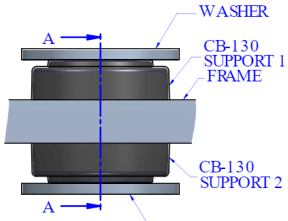


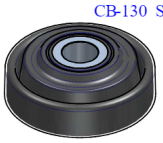


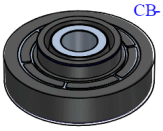


CB mounts are installed in pairs
but are sold individually.

| Type | Tightening torque Max. (Nm) | T Max.(mm) | T Min.(mm) | Q(mm) | Weight(gr) | Washer | Bolt Size (Metric) | Bolt Size (Imperial) | Code | Max. Load (kg) | Shore |
|---|---|---|---|---|---|---|---|---|---|---|---|
| CB 130 | 1190 | 40 | 40 | 71 | 1200 | 608278 | M30 | 1 1/8" | 156026 | 325 | 45 Sh |
| | | | | | | | | | 156027 | 500 | 55 Sh |
| | | | | | | | | | 156028 | 600 | 65 Sh |
| | | | | | | | | | 156029 | 800 | 70 Sh |

**AMC MECANOCAUCHO**
Industrialdea Zona A - Pab. 35.
Asteasu E-20159, Gipuzkoa
Spain
Tel.: +34 843 74 00 13
sales@amcsa.es
www.mecanocaucho.com

*In order to adapt its products to the state of the art, Aplicaciones Mecánicas del Caucho, S.A. reserves the right to modify the conception and manufacture of the materials presented in this catalogue without prior notice.*
*Document generated on 23/11/2026.*

# CB 150

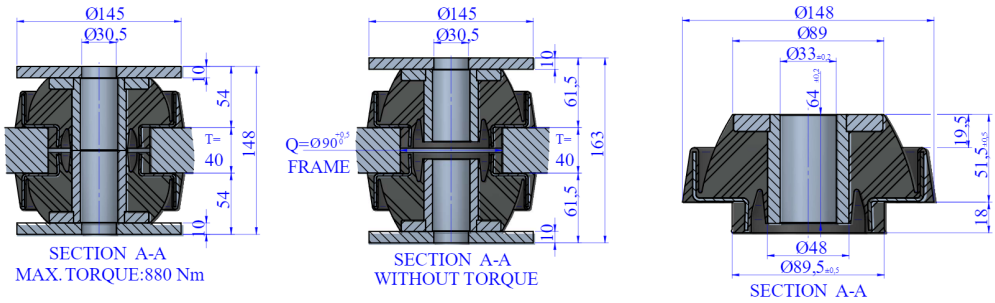


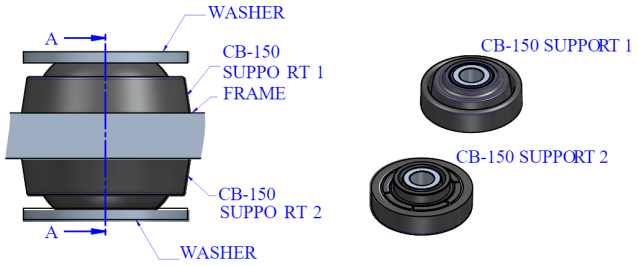


CB mounts are installed in pairs
but are sold individually.

| Type | Tightening torque Max. (Nm) | T Max.(mm) | T Min.(mm) | Q(mm) | Weight(gr) | Washer | Bolt Size (Metric) | Bolt Size (Imperial) | Code | Max. Load (kg) | Shore |
|---|---|---|---|---|---|---|---|---|---|---|---|
| CB 150 | 880 | 40 | 40 | 90 | 1783 | 608278 | M30 | 1 1/8" | 156065 | 700 | 45 Sh |
| | | | | | | | | | 156066 | 1000 | 55 Sh |
| | | | | | | | | | 156067 | 1800 | 65 Sh |
| | | | | | | | | | 156068 | 2000 | 70 Sh |

**AMC MECANOCAUCHO**
Industrialdea Zona A - Pab. 35.
Asteasu E-20159, Gipuzkoa
Spain
Tel.: +34 843 74 00 13
sales@amcsa.es
www.mecanocaucho.com

*In order to adapt its products to the state of the art, Aplicaciones Mecánicas del Caucho, S.A. reserves the right to modify the conception and manufacture of the materials presented in this catalogue without prior notice.*
*Document generated on 23/11/2026.*

# Elastic properties

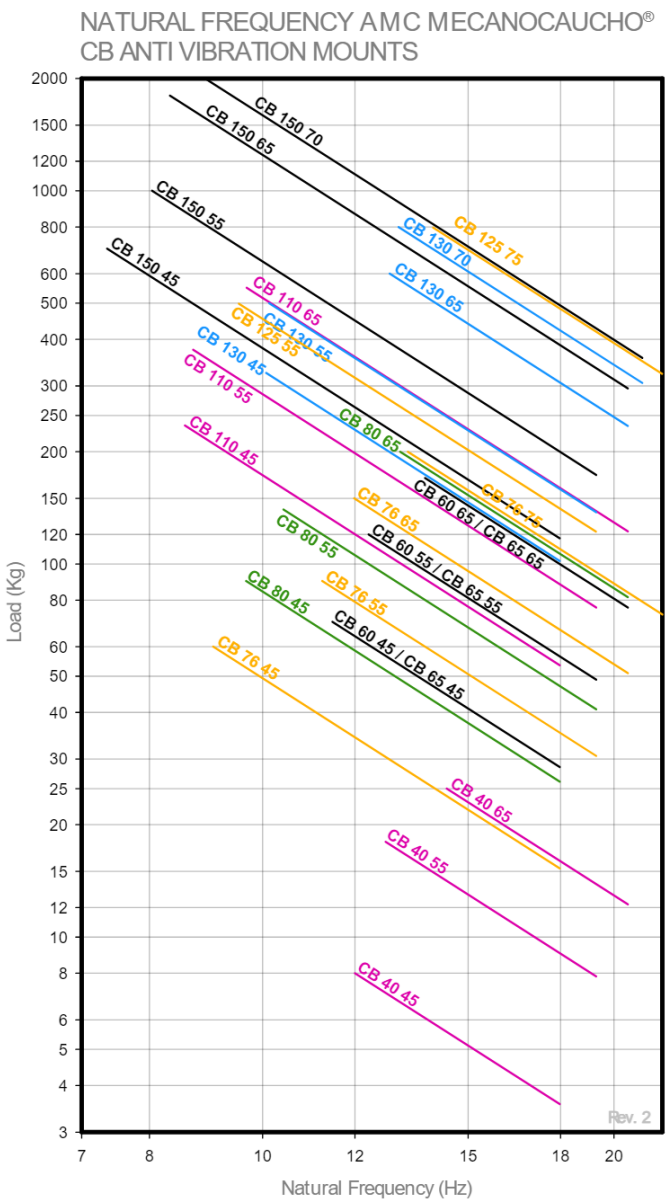


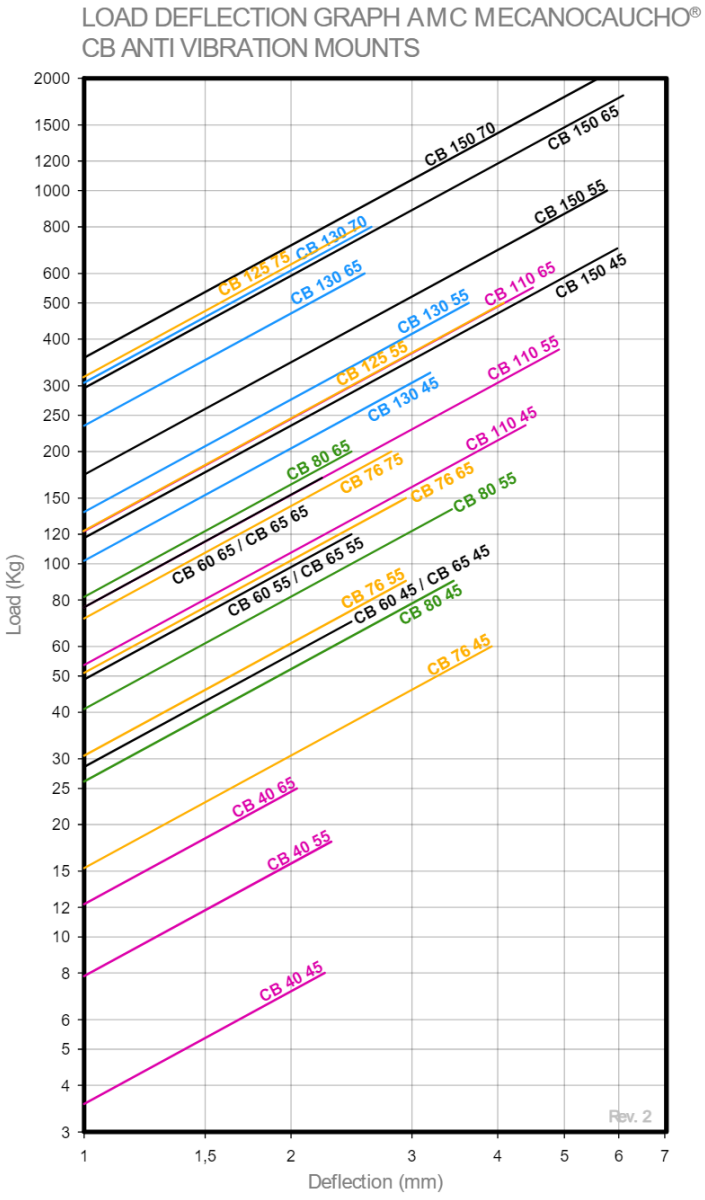


**AMC MECANOCAUCHO**
Industrialdea Zona A - Pab. 35.
Asteasu E-20159, Gipuzkoa
Spain
Tel.: +34 843 74 00 13
sales@amcsa.es
www.mecanocaucho.com

*In order to adapt its products to the state of the art, Aplicaciones Mecánicas del Caucho, S.A. reserves the right to modify the conception and manufacture of the materials presented in this catalogue without prior notice.*
*Document generated on 23/11/2026.*

## Technical characteristics

• The AMC-MECANOCAUCHO® CB mounts are radially more flexible tan axially. This feature is especially interesting for those machines or equipment where radial axis vibration isolation is important.

• The mount is provided with a built in multi-directional snubbering system that limits the maximum allowed displacements.

• Different sizes and hardness are available to accommodate applications from 4kg to 800kg per mount.

• Metal parts are embedded in rubber in order to prevent corrosion.

## Advantages

### Easy Installation

This mount requires minimal structural modifications, making installation quick and straightforward.

### High protection against weathering and chemical contamination

The bell housing protects the rubber from ozone and UV radiation, while also preventing contact with diesel, oils or other chemicals that could damage it.

### High robustness in dynamic applications for improved durability

These mounts offer enhanced robustness and are designed to withstand extreme load peaks. They are especially recommended where good durability is required in demanding applications.



*In order to adapt its products to the state of the art, Aplicaciones Mecánicas del Caucho, S.A. reserves the right to modify the conception and manufacture of the materials presented in this catalogue without prior notice.*
*Document generated on 23/11/2026.*