BRT Captive Mounts

Captive mounts designed for vibration isolation and lateral movement control of equipment requiring high stability.



The **AMC-MECANOCAUCHO® BRT captive mounts** are designed so that the elastomer works in both **compression and shear**, combining **effective vibration isolation with good horizontal stability**.

Their design helps **limit and control lateral movement** of the equipment while maintaining the elasticity required for vibration isolation. They are particularly suitable for installations with a **high centre of gravity** or where increased stability is required.

Thanks to their **integrated fail-safe design**, BRT mounts also provide mechanical restraint in the event of shocks or significant dynamic loads. They are particularly recommended for **electrical cabinets, racks, electronic equipment and other technical installations** requiring a combination of **vibration isolation, stability and mechanical safety**.

AMC MECANOCAUCHO
Industrialdea Zona A - Pab. 35.
Asteasu E-20159, Gipuzkoa
Spain
Tel.: +34 843 74 00 13
sales@amcsa.es
www.mecanocaucho.com

In order to adapt its products to the state of the art, Aplicaciones Mecánicas del Caucho, S.A. reserves the right to modify the conception and manufacture of the materials presented in this catalogue without prior notice.
Document generated on 24/11/2026.

Drawings

BRT 70

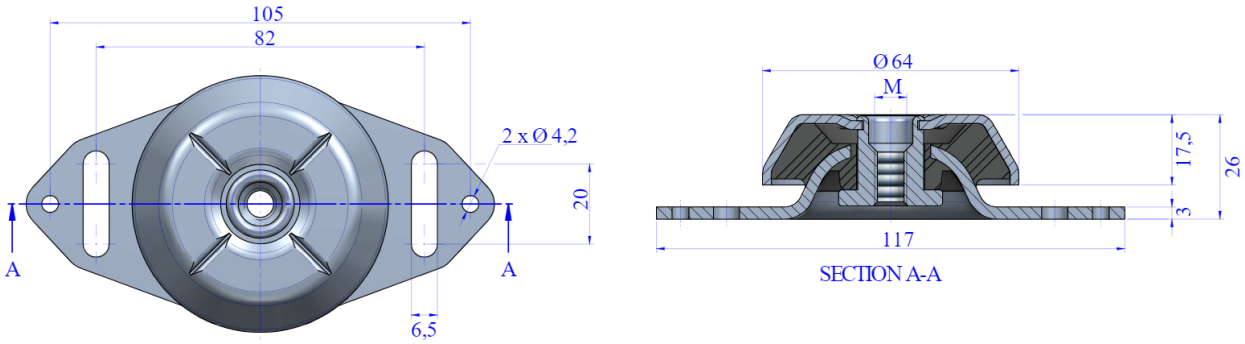

Type	Shore	Weight(gr)	Static Load Max (daN)	Maximum Total Load (N)	Code	M
BRT 70	45 Sh	245	50	1500	135805	M-6
					135806	M-8
					135807	M-10

AMC MECANOCAUCHO
Industrialdea Zona A - Pab. 35.
Asteasu E-20159, Gipuzkoa
Spain
Tel.: +34 843 74 00 13
sales@amcsa.es
www.mecanocaucho.com

In order to adapt its products to the state of the art, Aplicaciones Mecánicas del Caucho, S.A. reserves the right to modify the conception and manufacture of the materials presented in this catalogue without prior notice.
Document generated on 24/11/2026.

Elastic properties

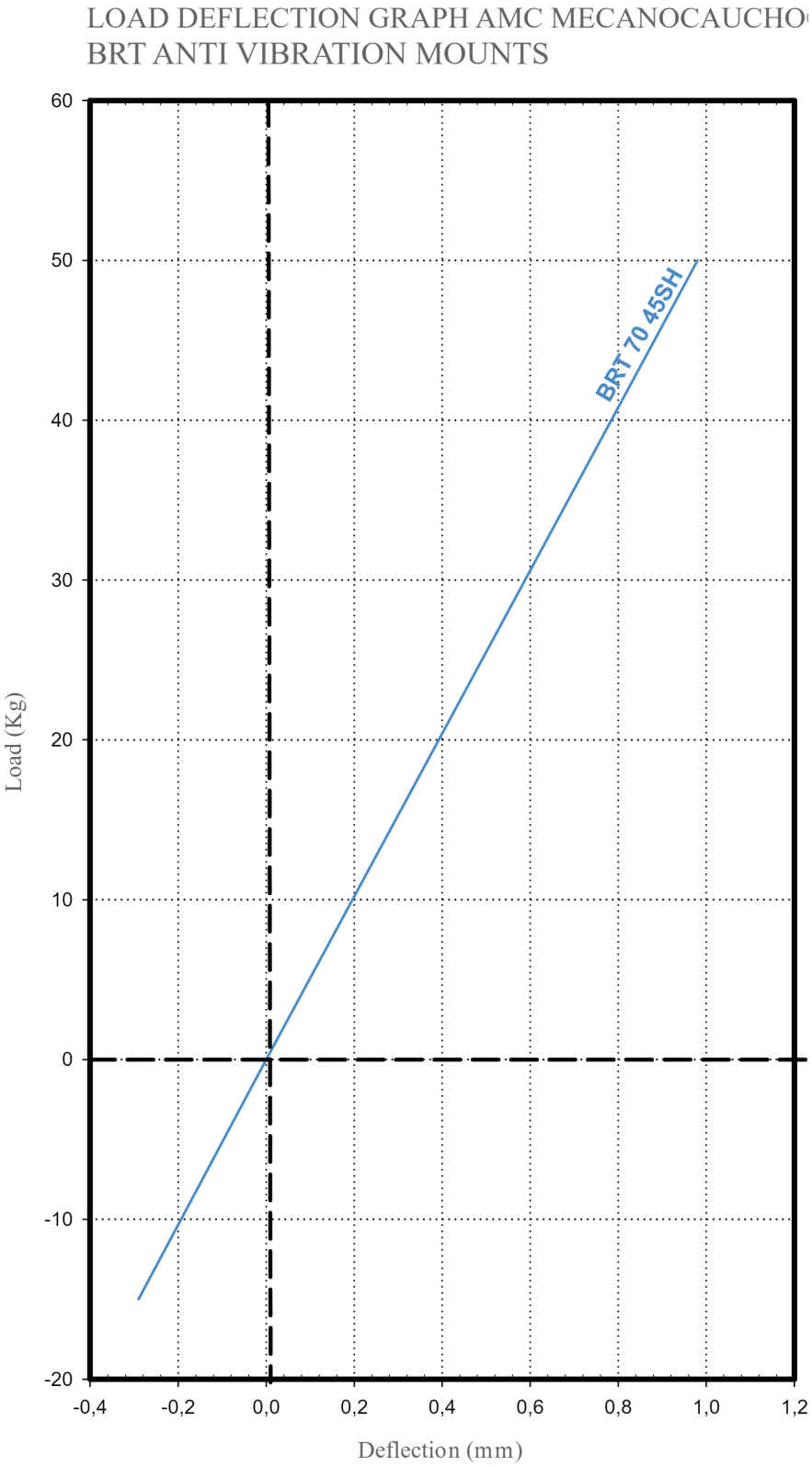

AMC MECANOCAUCHO
Industrialdea Zona A - Pab. 35.
Asteasu E-20159, Gipuzkoa
Spain
Tel.: +34 843 74 00 13
sales@amcsa.es
www.mecanocaucho.com

In order to adapt its products to the state of the art, Aplicaciones Mecánicas del Caucho, S.A. reserves the right to modify the conception and manufacture of the materials presented in this catalogue without prior notice.
Document generated on 24/11/2026.

Technical characteristics

- The top metal hood protects the rubber from the Ozone, UV rays, diesel or oils which may cause major damage to the rubber.

- The metal parts have a suitable anticorrosive treatment for outdoor applications. RoHs compliant.

- They have an interlocking metal component that provides a fail-safe protection for mobile applications. This device limits vertical movement when the mounting is submitted to shock inputs.

- The mounts are clearly identified, as the baseplates are engraved with the type and hardness, which makes it possible to easily recognise the part even after several years of use.

- The hood has a cross stamped on the top, which enhances its stiffness on mobile applications and also improves the evacuation of oils or liquids that splash onto it.

Advantages

Easy Installation

This mount requires minimal structural modifications, making installation quick and straightforward.

Mount offering high stability

Suspensions built with this mount barely move, thanks to a geometry designed to control the movement of the suspended element.

High protection against weathering and chemical contamination

The bell housing protects the rubber from ozone and UV radiation, while also preventing contact with diesel, oils or other chemicals that could damage it.

AMC MECANOCAUCHO
Industrialdea Zona A - Pab. 35.
Asteasu E-20159, Gipuzkoa
Spain
Tel.: +34 843 74 00 13
sales@amcsa.es
www.mecanocaucho.com

In order to adapt its products to the state of the art, Aplicaciones Mecánicas del Caucho, S.A. reserves the right to modify the conception and manufacture of the materials presented in this catalogue without prior notice.
Document generated on 24/11/2026.