AN Vibration Isolator

Vibration isolator with adjustable axial stiffness through stacking, designed for axial vibration isolation and protected against corrosion by a zinc-nickel coating.



The **AMC-MECANOCAUCHO® AN vibration isolators** are specifically designed for applications where vibrations and dynamic forces occur primarily in the **axial direction**.

Their design provides elastic behavior in both **tension and compression**. Multiple isolators can be **stacked to adjust the axial stiffness** according to the characteristics of the installation and the required level of vibration isolation.

This adjustability makes them particularly suitable for applications requiring **precise control of axial stiffness and displacement**, especially equipment subjected to alternating forces.

The metal components feature a **zinc-nickel coating providing excellent corrosion resistance**, including in outdoor environments exposed to humidity and salt spray.

AMC MECANOCAUCHO
Industrialdea Zona A - Pab. 35.
Asteasu E-20159, Gipuzkoa
Spain
Tel.: +34 843 74 00 13
sales@amcsa.es
www.mecanocaucho.com

In order to adapt its products to the state of the art, Aplicaciones Mecánicas del Caucho, S.A. reserves the right to modify the conception and manufacture of the materials presented in this catalog without prior notice.
Document generated on 24/11/2026.

Drawings

AN-60

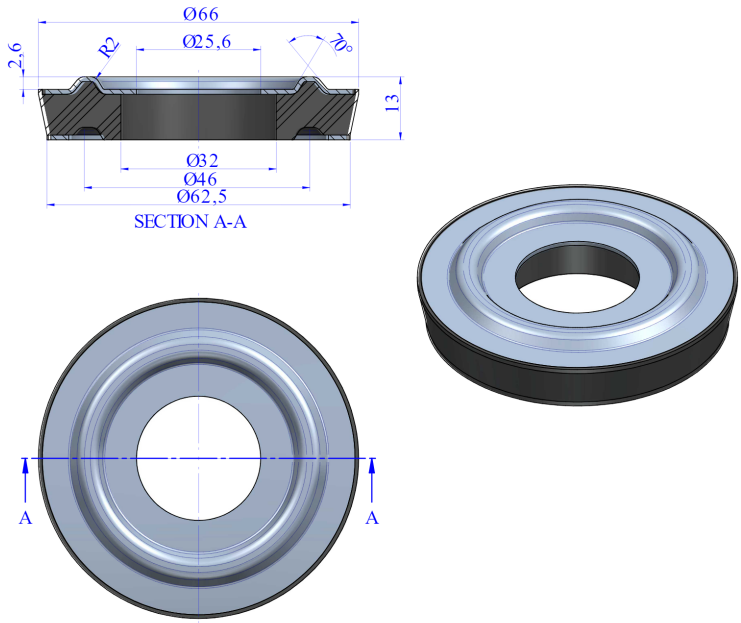

Type	Code	Max. Load(lbs)	Deflection(in)	Shore	Weight(lbs)
AN-60	180239	1543	0.07	60Sh	0.12

AMC MECANOCAUCHO
Industrialdea Zona A - Pab. 35.
Asteasu E-20159, Gipuzkoa
Spain
Tel.: +34 843 74 00 13
sales@amcsa.es
www.mecanocaucho.com

In order to adapt its products to the state of the art, Aplicaciones Mecánicas del Caucho, S.A. reserves the right to modify the conception and manufacture of the materials presented in this catalog without prior notice.
Document generated on 24/11/2026.

Elastic properties

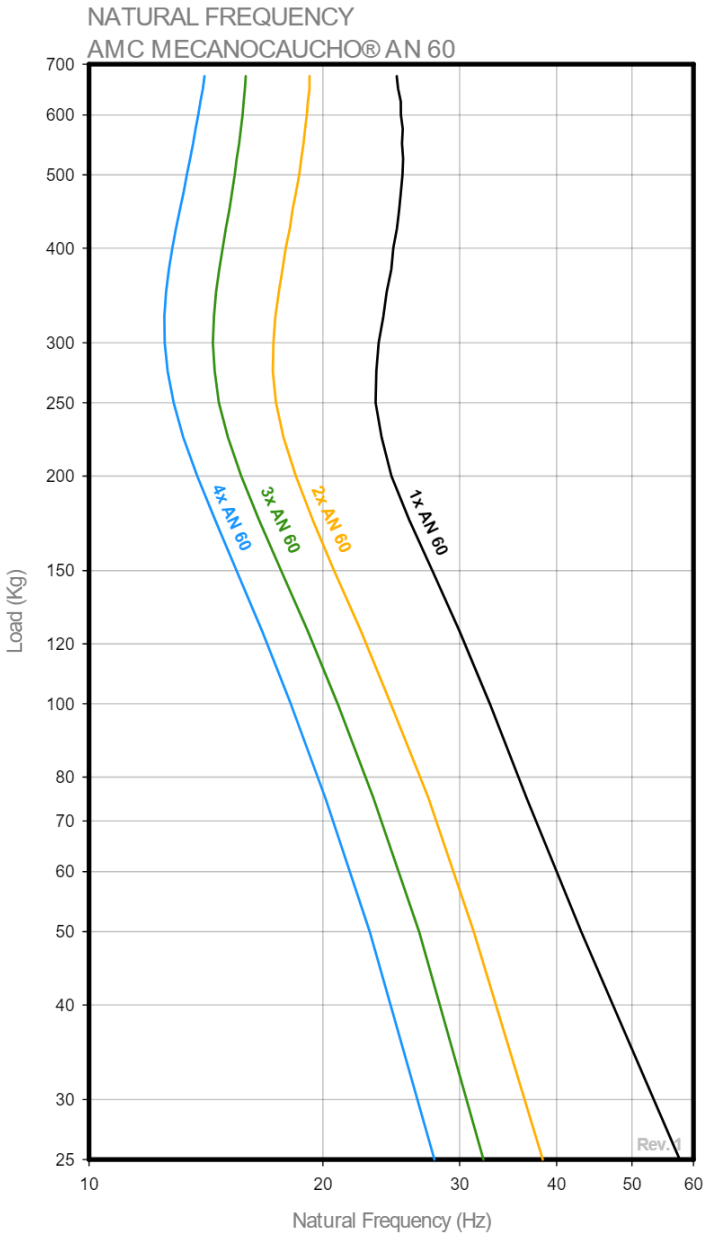

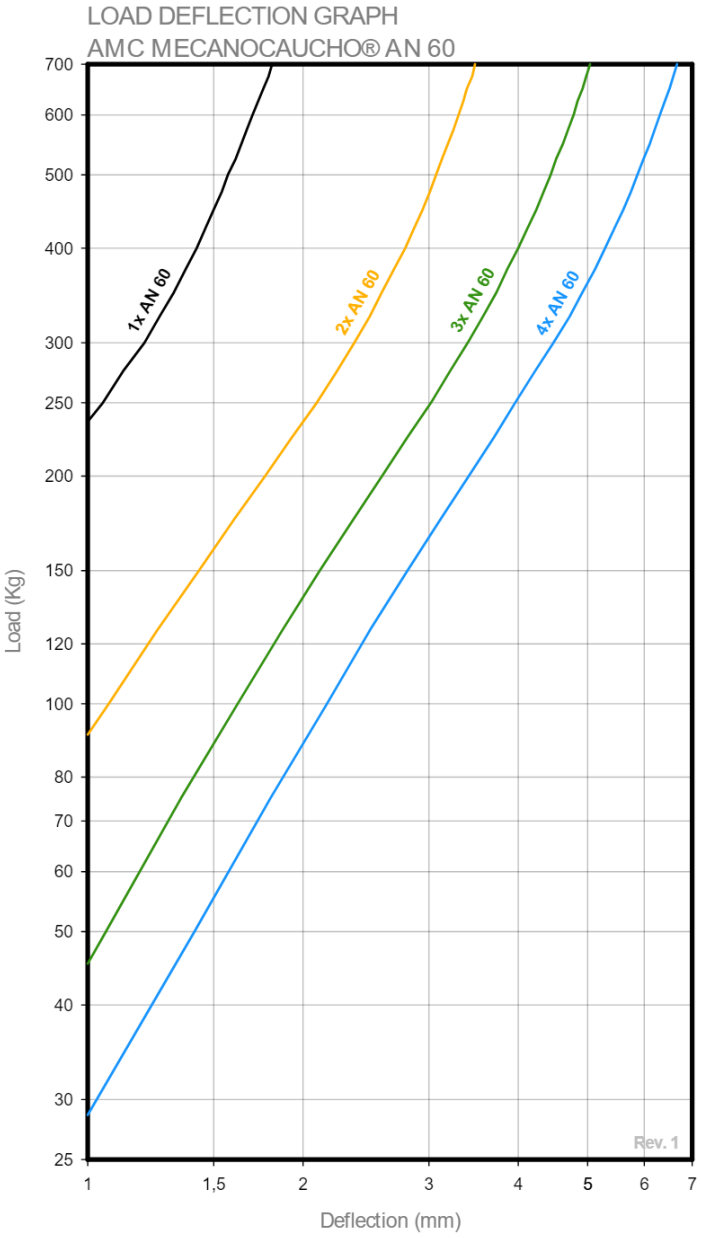

AMC MECANOCAUCHO
Industrialdea Zona A - Pab. 35.
Asteasu E-20159, Gipuzkoa
Spain

Tel.: +34 843 74 00 13

sales@amcsa.es

www.mecanocaucho.com

In order to adapt its products to the state of the art, Aplicaciones Mecánicas del Caucho, S.A. reserves the right to modify the conception and manufacture of the materials presented in this catalog without prior notice.
Document generated on 24/11/2026.

Technical characteristics

AMC-MECANOCAUCHO® type AN-60 vibration isolators are ideal for axial loads of compression or traction.

Depending on the number of AN-60 vibration isolators stacked, the rigidity of the system can be adjusted to suit the requirements of the application.

Advantages

Easy installation

This mount requires no major modifications to the structure for installation.

High robustness in dynamic applications for improved durability

These mounts offer enhanced robustness and are designed to withstand extreme load peaks. They are especially recommended when good durability is required in demanding applications.

AMC MECANOCAUCHO
Industrialdea Zona A - Pab. 35.
Asteasu E-20159, Gipuzkoa
Spain
Tel.: +34 843 74 00 13
sales@amcsa.es
www.mecanocaucho.com

In order to adapt its products to the state of the art, Aplicaciones Mecánicas del Caucho, S.A. reserves the right to modify the conception and manufacture of the materials presented in this catalog without prior notice.
Document generated on 24/11/2026.