# 2 AMC Anti-Seismic Spring Mounts

## Double-spring anti-seismic mounts designed to provide high load capacity, low-frequency vibration isolation and mechanical protection under seismic conditions.



**AMC-MECANOCAUCHO® 2 AMC Anti-Seismic Spring Mounts** incorporate **two steel springs**, providing a **high load capacity** whilst maintaining the high deflection required for effective low-frequency vibration isolation.

Under normal operating conditions, the springs allow the movement required for effective **low-frequency vibration isolation**. The double-spring configuration enables heavier equipment to be supported without compromising the vibration isolation performance of the system.

An **integrated seismic restraint system** limits excessive equipment movement under exceptional or seismic loads, whilst allowing the movement required for normal operation of the springs.

The restraint system has been specifically designed to **withstand high dynamic loads** that may occur during a seismic event and to help maintain the mechanical integrity of the equipment.

2 AMC spring mounts are particularly suitable for **heavy equipment incorporating moving or rotating components**, including **fans, pumps, compressors, refrigeration units, generator sets and HVAC equipment**, requiring high load capacity, low-frequency vibration isolation and mechanical protection in seismic zones.

**AMC MECANOCAUCHO**
Industrialdea Zona A - Pab. 35.
Asteasu E-20159, Gipuzkoa
Spain
Tel.: +34 843 74 00 13
sales@amcsa.es
www.mecanocaucho.com

*In order to adapt its products to the state of the art, Aplicaciones Mecánicas del Caucho, S.A. reserves the right to modify the conception and manufacture of the materials presented in this catalogue without prior notice.*
*Document generated on 23/11/2026.*

# Drawings

## 2 AMC ANTI-SEISMIC + SYLOMER

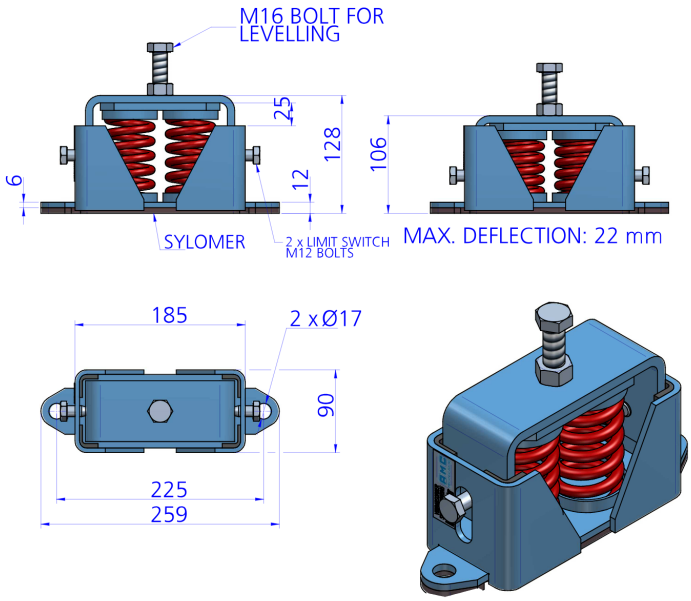


| Type | Code | No. Springs | Spring color | Max.Load (kg) | Deflection(mm) | K(N/mm) | Weight(kg) |
|---|---|---|---|---|---|---|---|
| 2 AMC ANTI-SEISMIC + SYLOMER | 20528 | 2 | YELLOW | 400 | 22 | 185 | 4.869 |
| | 20480 | 2 | PURPLE | 610 | 22 | 291 | 4.869 |
| | 20487 | 2 | GREEN | 810 | 22 | 331 | 4.97 |
| | 20488 | 2 | GREY | 1080 | 22 | 509 | 5.192 |
| | 20489 | 2 | WHITE | 1224 | 22 | 567 | 5.06 |
| | 20490 | 2 | RED | 1606 | 22 | 784 | 5.386 |

**AMC MECANOCAUCHO**
Industrialdea Zona A - Pab. 35.
Asteasu E-20159, Gipuzkoa
Spain
Tel.: +34 843 74 00 13
sales@amcsa.es
www.mecanocaucho.com

*In order to adapt its products to the state of the art, Aplicaciones Mecánicas del Caucho, S.A. reserves the right to modify the conception and manufacture of the materials presented in this catalogue without prior notice.*
*Document generated on 23/11/2026.*

## 2 AMC ANTI-SEISMIC + SYLOMER 4 Holes

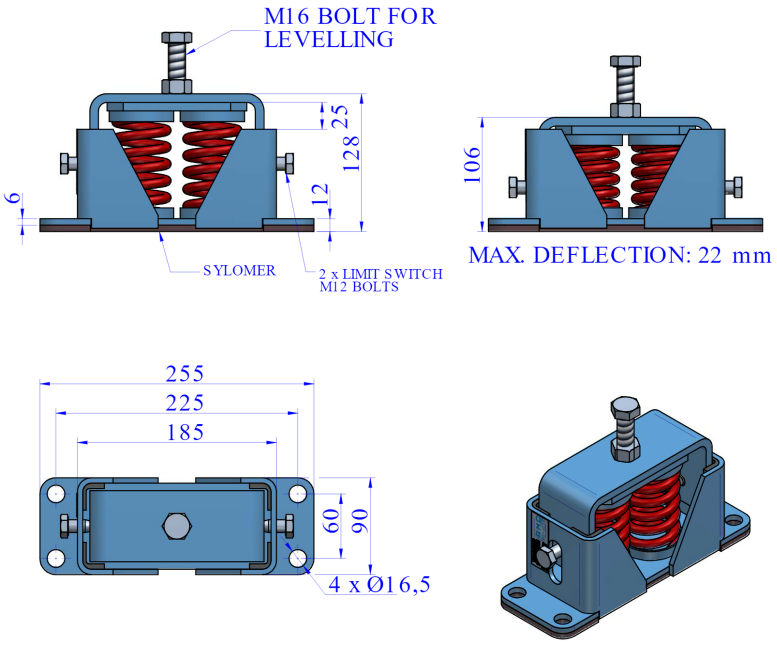


| Type | Code | Spring color | No. Springs | Max.Load (kg) | Deflection(mm) | K(N/mm) | Weight(kg) |
|---|---|---|---|---|---|---|---|
| 2 AMC ANTI-SEISMIC + SYLOMER 4 Holes | 21512 | YELLOW | 2 | 400 | 22 | 185 | 5.255 |
| | 21513 | PURPLE | 2 | 610 | 22 | 291 | 5.255 |
| | 21514 | GREEN | 2 | 810 | 22 | 331 | 5.255 |
| | 21515 | GREY | 2 | 1080 | 22 | 509 | 5.255 |
| | 21516 | WHITE | 2 | 1224 | 22 | 567 | 5.255 |
| | 21517 | RED | 2 | 1606 | 22 | 784 | 5.255 |

**AMC MECANOCAUCHO**
Industrialdea Zona A - Pab. 35.
Asteasu E-20159, Gipuzkoa
Spain
Tel.: +34 843 74 00 13
sales@amcsa.es
www.mecanocaucho.com

*In order to adapt its products to the state of the art, Aplicaciones Mecánicas del Caucho, S.A. reserves the right to modify the conception and manufacture of the materials presented in this catalogue without prior notice.*
*Document generated on 23/11/2026.*

## 2 AMC ANTI-SEISMIC

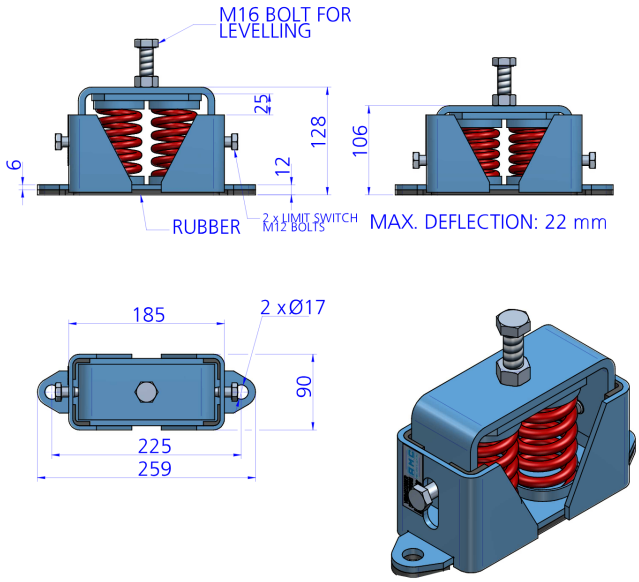


| Type | Code | No. Springs | Spring color | Max.Load (kg) | Deflection(mm) | K(N/mm) | Weight(kg) |
|---|---|---|---|---|---|---|---|
| 2 AMC ANTI-SEISMIC | 20529 | 2 | YELLOW | 400 | 22 | 185 | 4.819 |
| | 20494 | 2 | PURPLE | 610 | 22 | 291 | 4.819 |
| | 20496 | 2 | GREEN | 810 | 22 | 331 | 4.919 |
| | 20497 | 2 | GREY | 1080 | 22 | 509 | 5.011 |
| | 20498 | 2 | WHITE | 1224 | 22 | 567 | 5.142 |
| | 20500 | 2 | RED | 1606 | 22 | 784 | 5.337 |

**AMC MECANOCAUCHO**
Industrialdea Zona A - Pab. 35.
Asteasu E-20159, Gipuzkoa
Spain
Tel.: +34 843 74 00 13
sales@amcsa.es
www.mecanocaucho.com

*In order to adapt its products to the state of the art, Aplicaciones Mecánicas del Caucho, S.A. reserves the right to modify the conception and manufacture of the materials presented in this catalogue without prior notice.*
*Document generated on 23/11/2026.*

## 2 AMC ANTI-SEISMIC 4 Holes

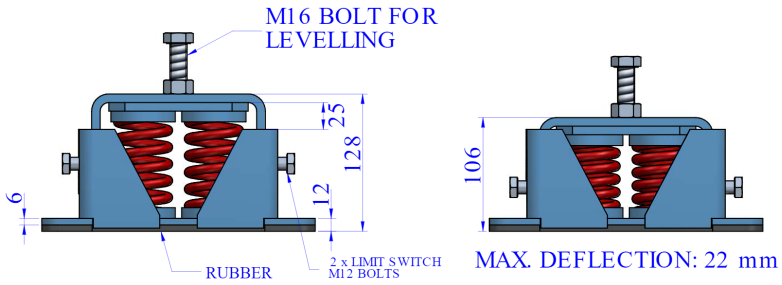


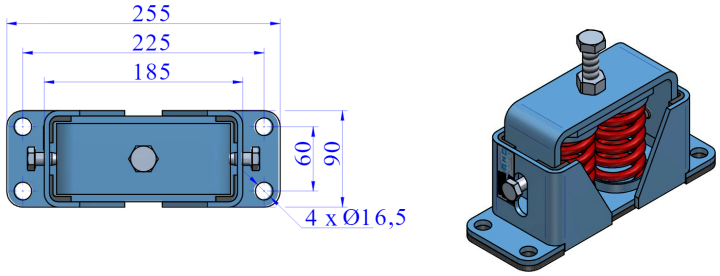


| Type | Code | Spring color | No. Springs | Max.Load (kg) | Deflection(mm) | K(N/mm) | Weight(kg) |
|---|---|---|---|---|---|---|---|
| 2 AMC ANTI-SEISMIC 4 Holes | 21518 | YELLOW | 2 | 400 | 22 | 185 | 5.274 |
| | 21519 | PURPLE | 2 | 610 | 22 | 291 | 5.274 |
| | 21520 | GREEN | 2 | 810 | 22 | 331 | 5.274 |
| | 21521 | GREY | 2 | 1080 | 22 | 509 | 5.274 |
| | 21522 | WHITE | 2 | 1224 | 22 | 567 | 5.274 |
| | 21523 | RED | 2 | 1606 | 22 | 784 | 5.274 |

**AMC MECANOCAUCHO**
Industrialdea Zona A - Pab. 35.
Asteasu E-20159, Gipuzkoa
Spain
Tel.: +34 843 74 00 13
sales@amcsa.es
www.mecanocaucho.com

*In order to adapt its products to the state of the art, Aplicaciones Mecánicas del Caucho, S.A. reserves the right to modify the conception and manufacture of the materials presented in this catalogue without prior notice.*
*Document generated on 23/11/2026.*

## Elastic properties

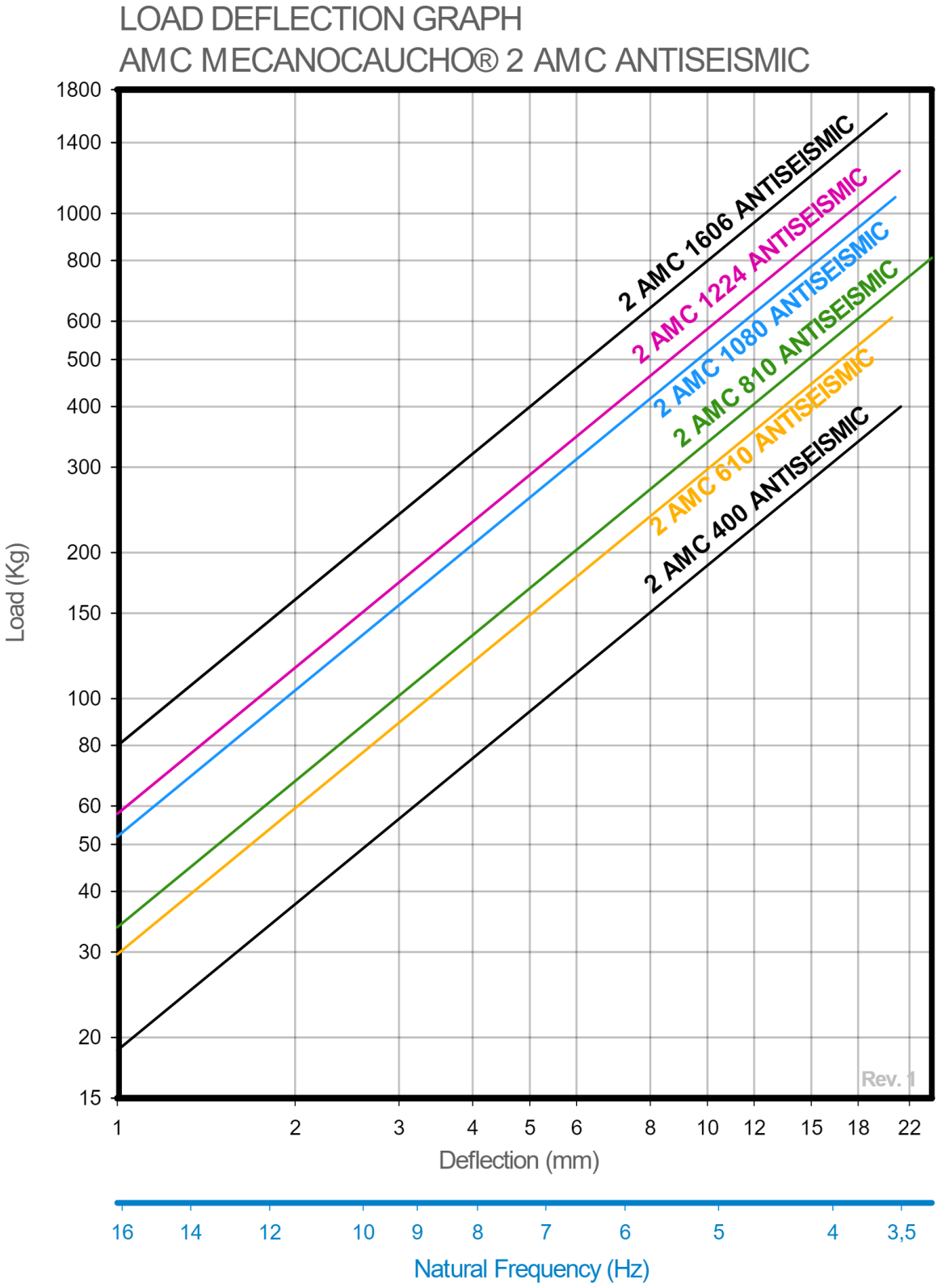


**AMC MECANOCAUCHO**
Industrialdea Zona A - Pab. 35.
Asteasu E-20159, Gipuzkoa
Spain
Tel.: +34 843 74 00 13
sales@amcsa.es
www.mecanocaucho.com

*In order to adapt its products to the state of the art, Aplicaciones Mecánicas del Caucho, S.A. reserves the right to modify the conception and manufacture of the materials presented in this catalogue without prior notice.*
*Document generated on 23/11/2026.*

## Advantages

### Easy Installation

This mount requires minimal structural modifications, making installation quick and straightforward.

### Improved isolation

It offers improved isolation compared with conventional anti-vibration mounts of similar geometry.

### Mount offering high stability

Suspensions built with this mount barely move, thanks to a geometry designed to control the movement of the suspended element.

**AMC MECANOCAUCHO**
Industrialdea Zona A - Pab. 35.
Asteasu E-20159, Gipuzkoa
Spain
Tel.: +34 843 74 00 13
sales@amcsa.es
www.mecanocaucho.com

*In order to adapt its products to the state of the art, Aplicaciones Mecánicas del Caucho, S.A. reserves the right to modify the conception and manufacture of the materials presented in this catalogue without prior notice.*
*Document generated on 23/11/2026.*