# 1 AMC Anti-Seismic Spring Isolators

## Anti-seismic spring vibration isolators with integrated seismic restraints, designed to provide low-frequency vibration isolation and mechanical protection of equipment under seismic conditions



**AMC-MECANOCAUCHO® 1 AMC Anti-Seismic Spring Isolators** combine **high-deflection steel springs** with an **integrated seismic restraint system** to provide both effective vibration isolation and mechanical protection of equipment under seismic conditions.

Under normal operating conditions, the springs allow the movement required for effective **low-frequency vibration isolation**. Under exceptional or seismic loads, the **seismic restraint system** limits excessive equipment movement and helps maintain its mechanical integrity.

The restraint system has been specifically designed to **withstand high dynamic loads** that may occur during a seismic event without compromising vibration isolation performance under normal operating conditions.

These spring isolators are particularly suitable for **equipment incorporating moving or rotating components**, including **fans, pumps, compressors, refrigeration units, generator sets, and HVAC equipment**, where both low-frequency vibration isolation and mechanical protection in seismic zones are required.

**AMC MECANOCAUCHO**
Industrialdea Zona A - Pab. 35.
Asteasu E-20159, Gipuzkoa
Spain
Tel.: +34 843 74 00 13
sales@amcsa.es
www.mecanocaucho.com

*In order to adapt its products to the state of the art, Aplicaciones Mecánicas del Caucho, S.A. reserves the right to modify the conception and manufacture of the materials presented in this catalog without prior notice.*
*Document generated on 24/11/2026.*

# Drawings

## 1 AMC ANTI-SEISMIC + SYLOMER

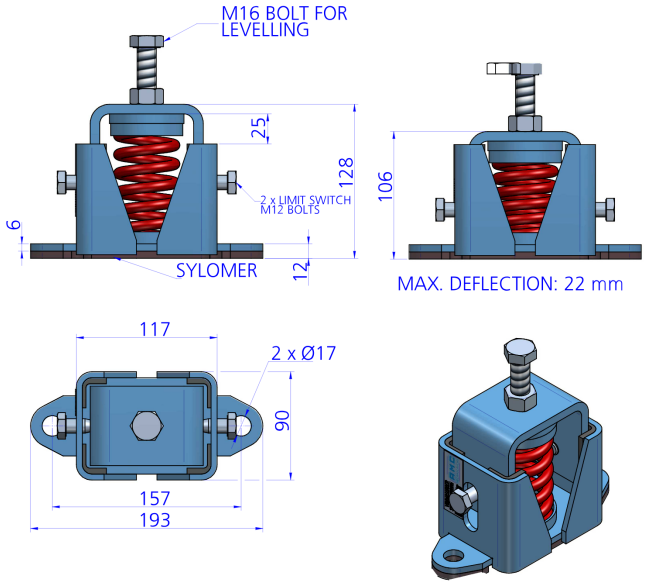


| Type | Code | No. Springs | Spring color | Max. Load (lbs) | Deflection(in) | K(N/mm) | Weight(lbs) |
|---|---|---|---|---|---|---|---|
| 1 AMC ANTI-SEISMIC + SYLOMER | 20338 | 1 | YELLOW | 441 | 0.87 | 92 | 7 |
| | 20413 | 1 | PURPLE | 672 | 0.87 | 146 | 8 |
| | 20377 | 1 | GREEN | 893 | 0.87 | 166 | 8 |
| | 20378 | 1 | GREY | 1190 | 0.87 | 255 | 8 |
| | 20379 | 1 | WHITE | 1349 | 0.87 | 278 | 8 |
| | 20380 | 1 | RED | 1770 | 0.87 | 392 | 9 |

**AMC MECANOCAUCHO**
Industrialdea Zona A - Pab. 35.
Asteasu E-20159, Gipuzkoa
Spain
Tel.: +34 843 74 00 13
sales@amcsa.es
www.mecanocaucho.com

*In order to adapt its products to the state of the art, Aplicaciones Mecánicas del Caucho, S.A. reserves the right to modify the conception and manufacture of the materials presented in this catalog without prior notice.*
*Document generated on 24/11/2026.*

## 1 AMC ANTI-SEISMIC + SYLOMER 4 Holes

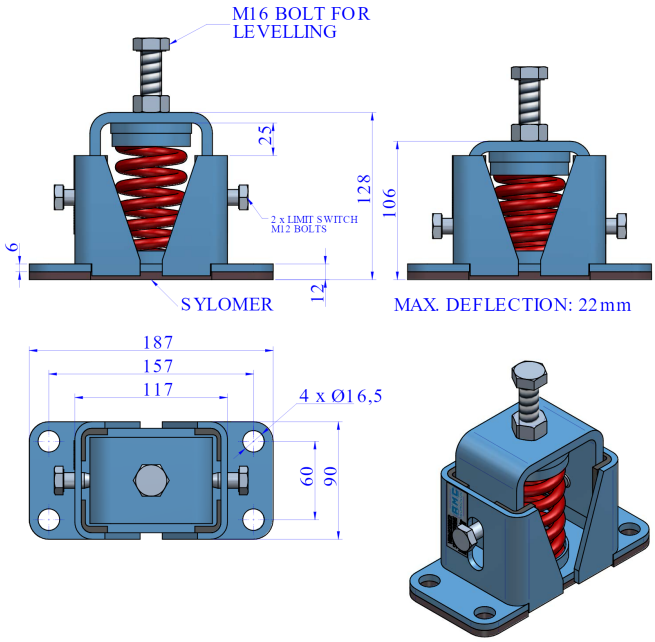


| Type | Code | Spring color | Max. Load (lbs) | No. Springs | Deflection(in) | K(N/mm) | Weight(lbs) |
|---|---|---|---|---|---|---|---|
| 1 AMC ANTI-SEISMIC + SYLOMER 4 Holes | 21500 | YELLOW | 441 | 1 | 0.87 | 92 | 8 |
| | 21501 | PURPLE | 672 | 1 | 0.87 | 146 | 8 |
| | 21502 | GREEN | 893 | 1 | 0.87 | 166 | 8 |
| | 21503 | GREY | 1190 | 1 | 0.87 | 255 | 8 |
| | 21504 | WHITE | 1349 | 1 | 0.87 | 278 | 8 |
| | 21505 | RED | 1770 | 1 | 0.87 | 392 | 8 |

**AMC MECANOCAUCHO**
Industrialdea Zona A - Pab. 35.
Asteasu E-20159, Gipuzkoa
Spain
Tel.: +34 843 74 00 13
sales@amcsa.es
www.mecanocaucho.com

*In order to adapt its products to the state of the art, Aplicaciones Mecánicas del Caucho, S.A. reserves the right to modify the conception and manufacture of the materials presented in this catalog without prior notice.*
*Document generated on 24/11/2026.*

# 1 AMC ANTI-SEISMIC

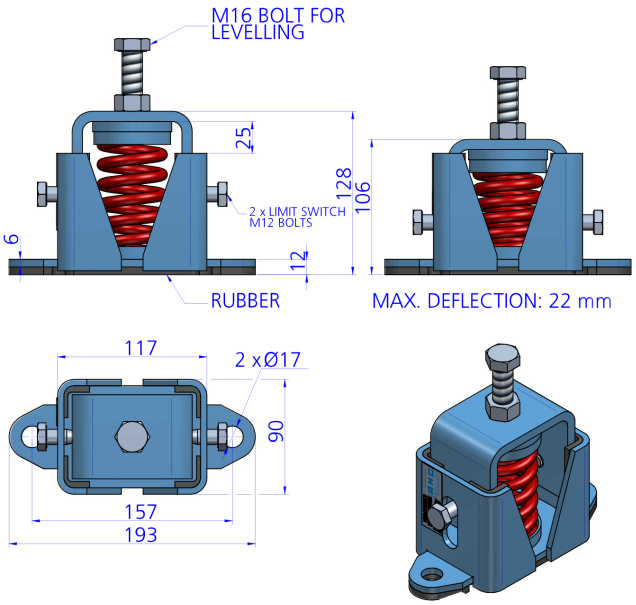


| Type | Code | No. Springs | Spring color | Max. Load (lbs) | Deflection(in) | K(N/mm) | Weight(lbs) |
|---|---|---|---|---|---|---|---|
| 1 AMC ANTI-SEISMIC | 20410 | 1 | YELLOW | 441 | 0.87 | 92 | 8 |
| | 20409 | 1 | PURPLE | 672 | 0.87 | 146 | 7 |
| | 20381 | 1 | GREEN | 893 | 0.87 | 166 | 7 |
| | 20382 | 1 | GREY | 1190 | 0.87 | 255 | 7 |
| | 20383 | 1 | WHITE | 1349 | 0.87 | 278 | 7 |
| | 20384 | 1 | RED | 1770 | 0.87 | 392 | 8 |

**AMC MECANOCAUCHO**
Industrialdea Zona A - Pab. 35.
Asteasu E-20159, Gipuzkoa
Spain
Tel.: +34 843 74 00 13
sales@amcsa.es
www.mecanocaucho.com

*In order to adapt its products to the state of the art, Aplicaciones Mecánicas del Caucho, S.A. reserves the right to modify the conception and manufacture of the materials presented in this catalog without prior notice.*
*Document generated on 24/11/2026.*

# 1 AMC ANTI-SEISMIC 4 Holes

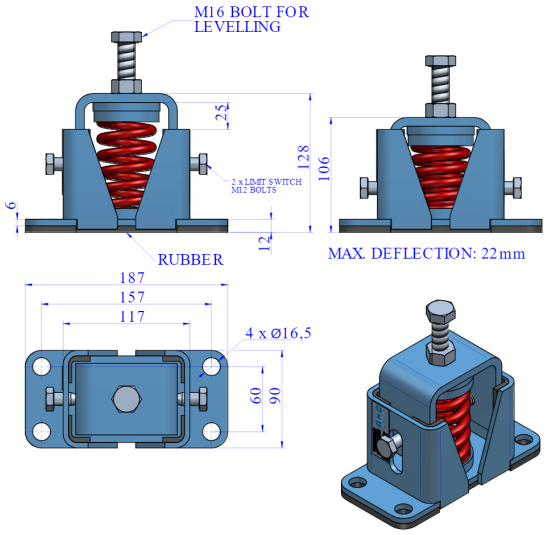


| Type | Code | Spring color | Max. Load (lbs) | No. Springs | Deflection(in) | K(N/mm) | Weight(lbs) |
|---|---|---|---|---|---|---|---|
| 1 AMC ANTI-SEISMIC 4 Holes | 21506 | YELLOW | 441 | 1 | 0.87 | 92 | 8 |
| | 21507 | PURPLE | 672 | 1 | 0.87 | 146 | 8 |
| | 21508 | GREEN | 893 | 1 | 0.87 | 166 | 8 |
| | 21509 | GREY | 1190 | 1 | 0.87 | 255 | 8 |
| | 21510 | WHITE | 1349 | 1 | 0.87 | 278 | 8 |
| | 21511 | RED | 1770 | 1 | 0.87 | 392 | 8 |

**AMC MECANOCAUCHO**
Industrialdea Zona A - Pab. 35.
Asteasu E-20159, Gipuzkoa
Spain
Tel.: +34 843 74 00 13
sales@amcsa.es
www.mecanocaucho.com

*In order to adapt its products to the state of the art, Aplicaciones Mecánicas del Caucho, S.A. reserves the right to modify the conception and manufacture of the materials presented in this catalog without prior notice.*
*Document generated on 24/11/2026.*

## Elastic properties

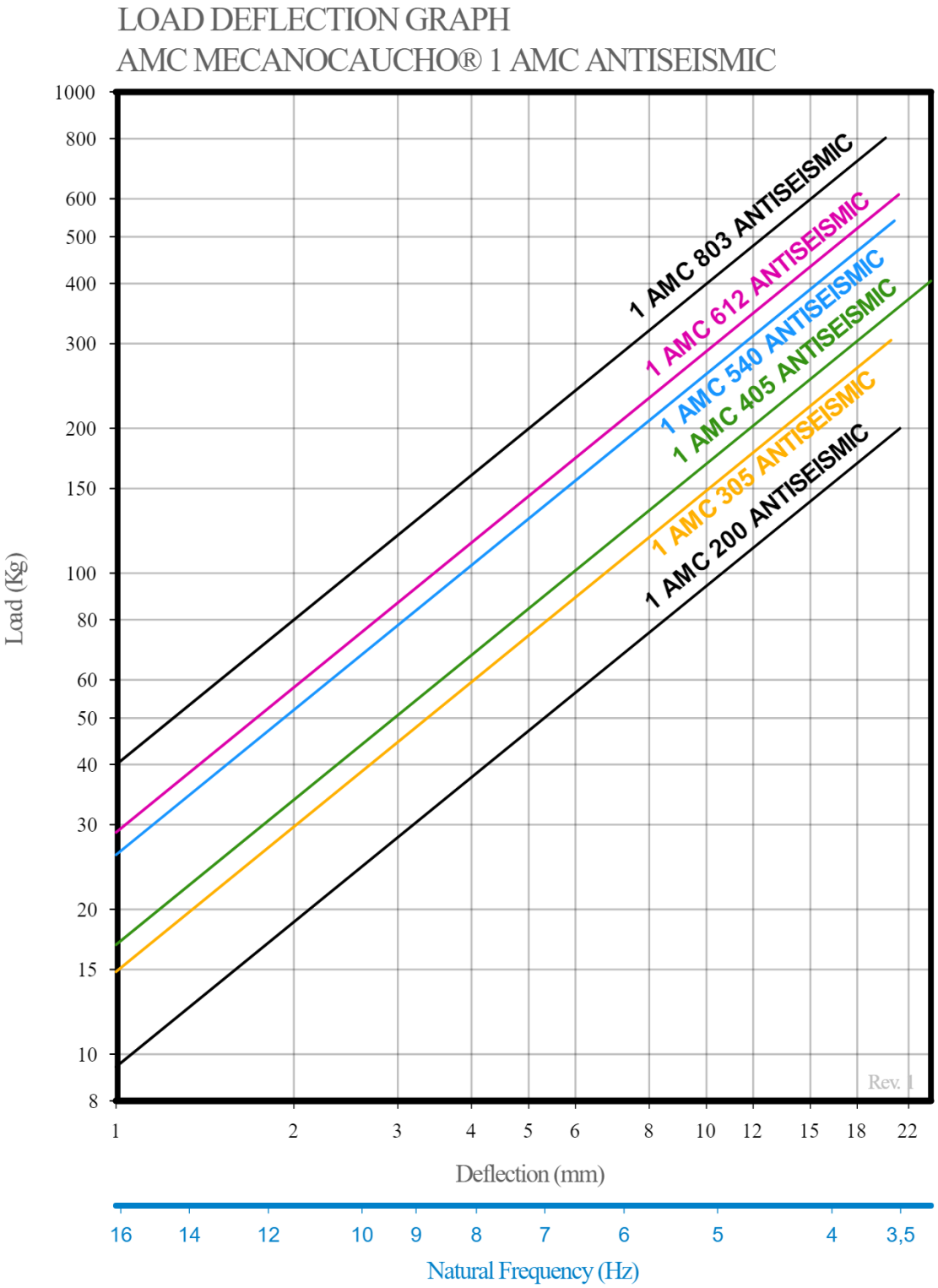


**AMC MECANOCAUCHO**
Industrialdea Zona A - Pab. 35.
Asteasu E-20159, Gipuzkoa
Spain
Tel.: +34 843 74 00 13
sales@amcsa.es
www.mecanocaucho.com

*In order to adapt its products to the state of the art, Aplicaciones Mecánicas del Caucho, S.A. reserves the right to modify the conception and manufacture of the materials presented in this catalog without prior notice.*
*Document generated on 24/11/2026.*

## Advantages

### Easy installation

This mount requires no major modifications to the structure for installation.

### Improved isolation

It offers improved isolation compared to conventional anti-vibration mounts of similar geometry.

### Mount offering high stability

Suspensions built with this mount barely move, thanks to a geometry designed to control the movement of the suspended element.

**AMC MECANOCAUCHO**
Industrialdea Zona A - Pab. 35.
Asteasu E-20159, Gipuzkoa
Spain

Tel.: +34 843 74 00 13

sales@amcsa.es

www.mecanocaucho.com

*In order to adapt its products to the state of the art, Aplicaciones Mecánicas del Caucho, S.A. reserves the right to modify the conception and manufacture of the materials presented in this catalog without prior notice.*
*Document generated on 24/11/2026.*